http://www.personal.psu.edu/clc5698/edsgn100_fall13_section15_team1_dp1.pdf

Collapsi-Cart

Engineering Design 100

Section 15, Team 1

Submitted by (*from left to right*):

Andrew Houpt; Derek McBlane; Mohamed Almaimani; Christopher Campos

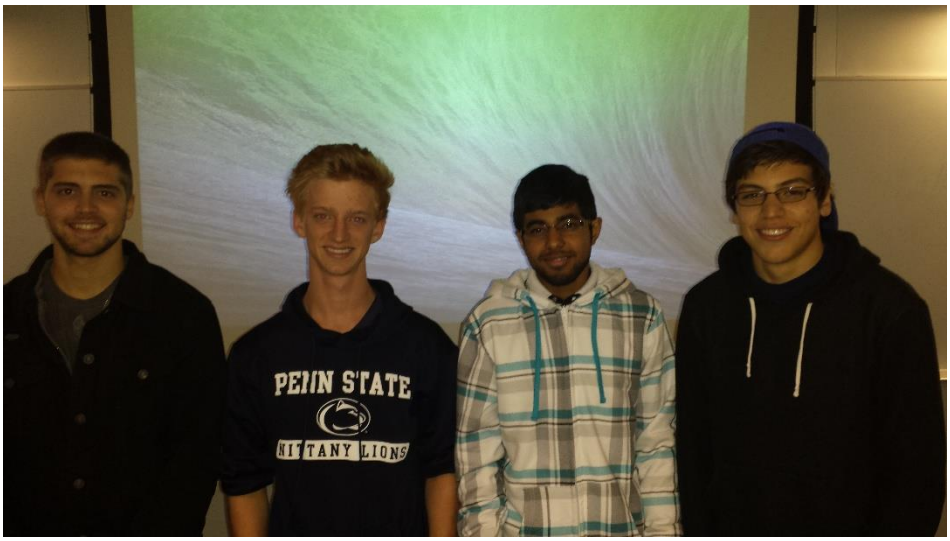

Submitted To: Xinli Wu

Date Submitted: 28 October 2013

FIG. 1. Image of Prototype

Abstract

Transporting items from the store to the car, and then into the home can be time consuming and inconvenient. Personal shopping carts would be a desirable product for frequent shoppers. Our personal shopping cart incorporates a simple, collapsible design that is low cost, lightweight, durable, and easily used.

Table of Contents

Abstract…….. Page 1
By: Andrew Houpt

Introduction…… Page 3
By: Christopher Campos , Mohamed Almaimani

Description of Design Task..…… Page 4
By: Derek McBlane, Mohamed Almaimani

Design Approach……Page 5

- **i. Table 1: Gantt chart**
  By: Mohamed Almaimani
- **ii. Customer Needs Assessment**
  By: Andrew Houpt
- **iii. Table 2: Customer Needs Assessment (averages)**
  By: Andrew Houpt

Concept Generation …… Page 6

- **i. FIG. 3-7: Concept Generation**
  By: Derek McBlane
- **ii. Table 3: Design Selection Matrix**
  By: Christopher Campos

Final Design and Prototype……..Page 12

- **i. Working Drawings**
  By: Derek McBlane
- **ii. Prototype**
  By: Derek McBlane, Mohamed Almaimani, Christopher Campos, Andrew Houpt
- **iii. Design Features**
  By: Mohamed Almaimani
- **iv. Operation Instruction**
  By: Mohamed Almaimani, Derek McBlane

Engineering Analysis……Page 18

- **i. Working Mechanism**
  By: Andrew Houpt
- **ii. Cost Analysis**
  By: Andrew Houpt

Conclusion……Page 20

By: Derek McBlane

Introduction

Since its introduction in mid-1900s, shopping carts have been an essential element in grocery shopping around the world. The convenience of being able to carry a multitude of items at once without much effort is what has made the shopping cart such a widely used product. Nowadays, the everyday shopping cart has been almost perfected to the point where any added elements would be deemed unreasonable. They are able to not only perform their tasks with ease but also have been so widely produced that it is hard to not find a major retailer without them. Any sized item can fit with ease and can just as easily be transferred from shelf, to checkout, to car. Then there exists the gap: getting the groceries from the car to the house with as much ease as it was to put it in. Carrying the bags individually is effective, but to an extent inefficient. For larger amounts of groceries, it is impossible to avoid having to make multiple trips to be able to bring in each bag of groceries. The cart would be perfect to carry all the groceries, but it is not conceivable to bring a shopping cart back home. Therefore, a portable alternative is incredibly useful in delivering the convenience for each consumer when they return back to their homes. That alternative is the collapsible shopping cart.

Description of Design Task

Problem Statement:

Consumers need a more efficient method of transporting goods from the store into their homes. Some people do not have cars, or cannot park near enough to their home for convenience. As a result, they have to limit the number of goods that they purchase, or make multiple trips that take much of their time.

Mission Statement:

The objective of this design project is to produce a low-cost, collapsible shopping cart for consumers to use to carry goods into their homes from their cars or even from the store.

Design Specifications

The folding shopping cart should be easy to use, ideal for transporting groceries and other goods, able to be compactly folded for storage, less than $50 to produce, and able to carry 100 pounds of material.

Design Approach

Table 1: Gantt chart

Customer Needs Assessment

In order to create the most desirable shopping cart design, the public's opinion was taken into consideration. A poll was created which required responders to rate the importance of specific shopping cart characteristics on a scale of 1-10 (1 being not important, 10 being extremely important). The poll contained the six design elements which the team felt would be most important to a customer: weight, cost, ease of use, durability, collapsed size, and expanded size. Of these six elements, the results of the polling showed that the majority of respondents wanted a low cost cart above all else. The collapsed and expanded sizes were the next most important elements, followed closely by ease of use, weight, and durability. Information gathered about the preferences of the public helped us to brainstorm designs and ultimately choose the design which best meets the needs of the customer.

	Cost	Durability	Collapsed Size	Expanded Size	Ease of Use	Weight
Average Response	8.7	8.2	8	7.7	7.2	7.1

Table 2: Customer Needs Assessment (averages)

Concept Generation

Based off of the results from the Customer Needs assessment, we were able to determine what goals our final design concepts should meet before we'd build our prototype. Initially we were trying to find a way to make the cart collapsible, now we must incorporate the overall cost of the product and the size of the final expanded product, all while being able to make it collapse in as simple of a manner as we could comprise. With these in mind, we created the criteria each design had to meet. Each member of the team had to design a project and do a step by step analysis of not only the design itself, but the folding and unfolding process involved.

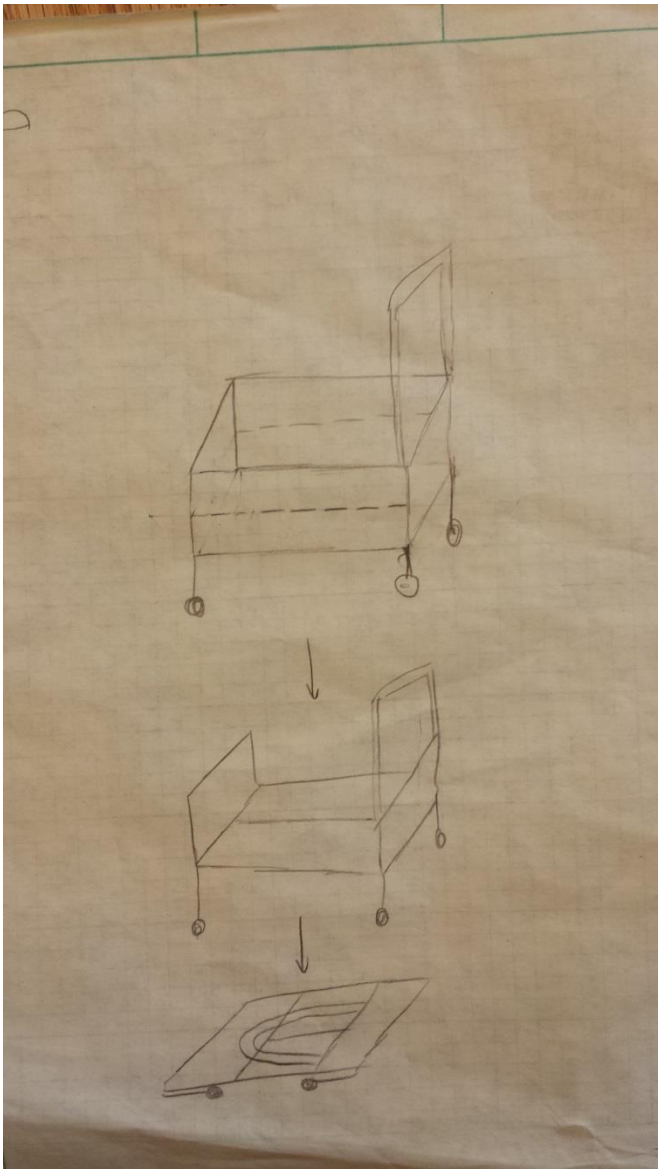

FIG. 3. Concept 1

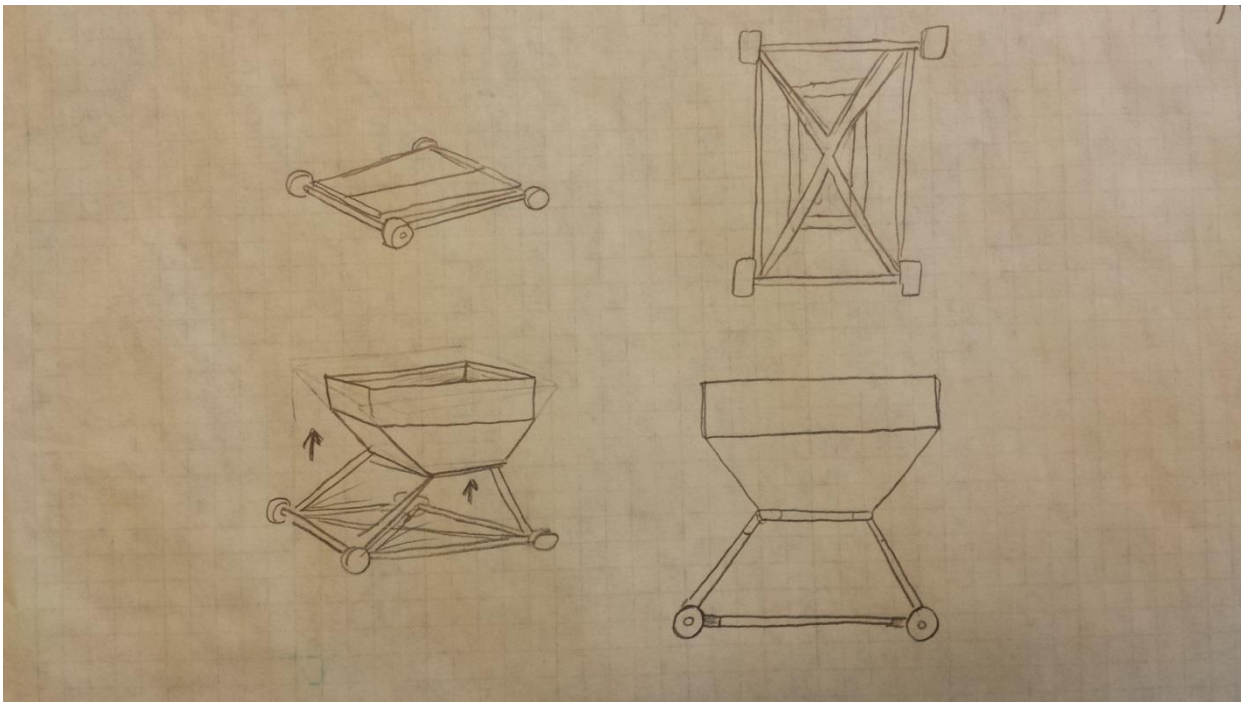

FIG. 4. Concept 2

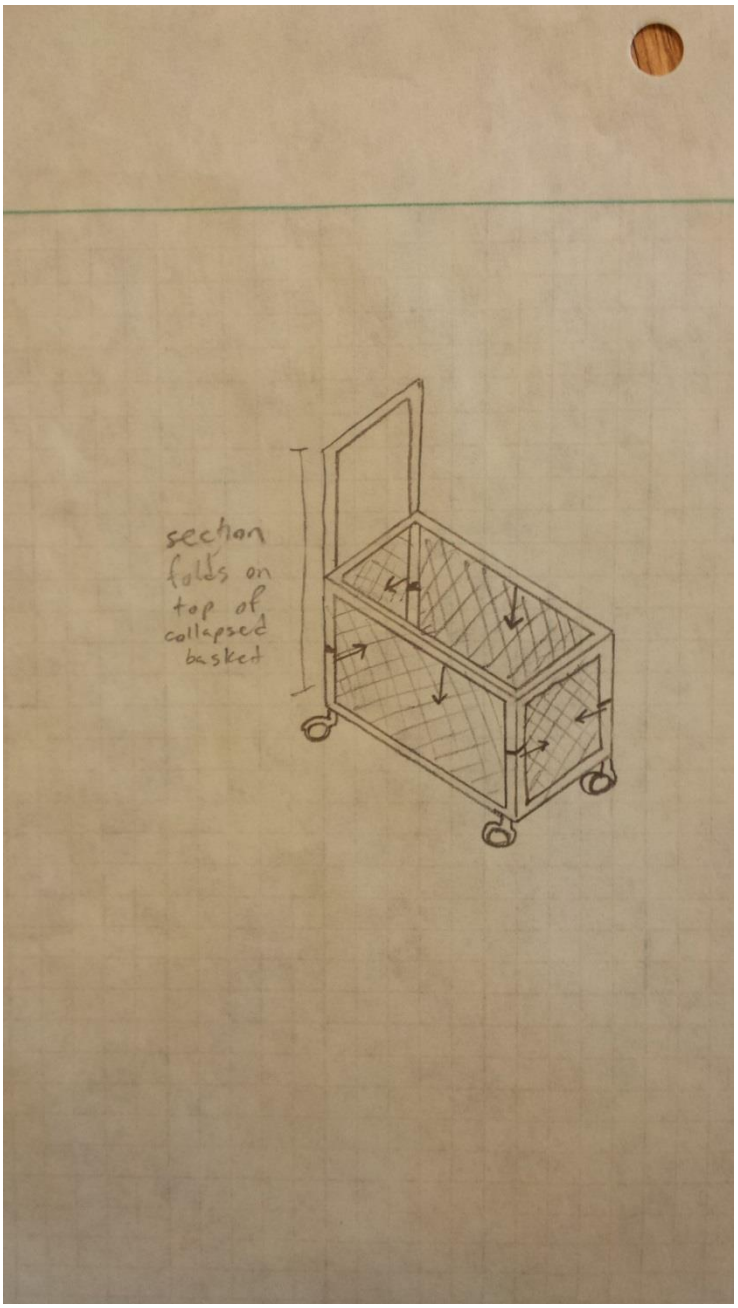

FIG. 5. Concept 3

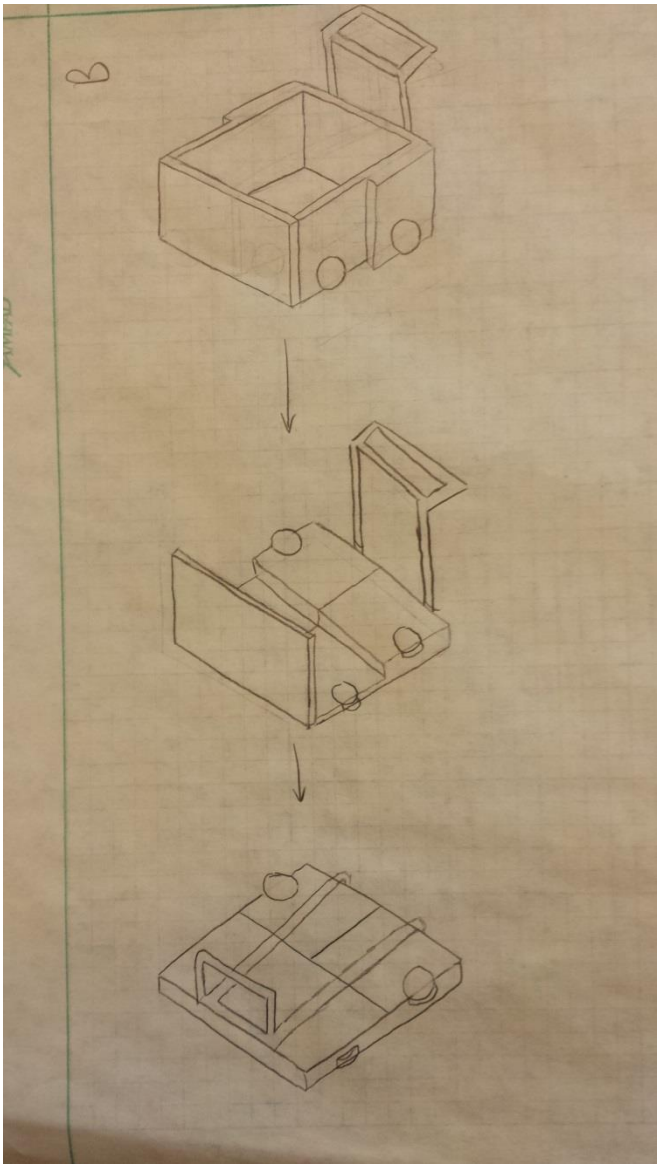

FIG. 6. Concept 4

v

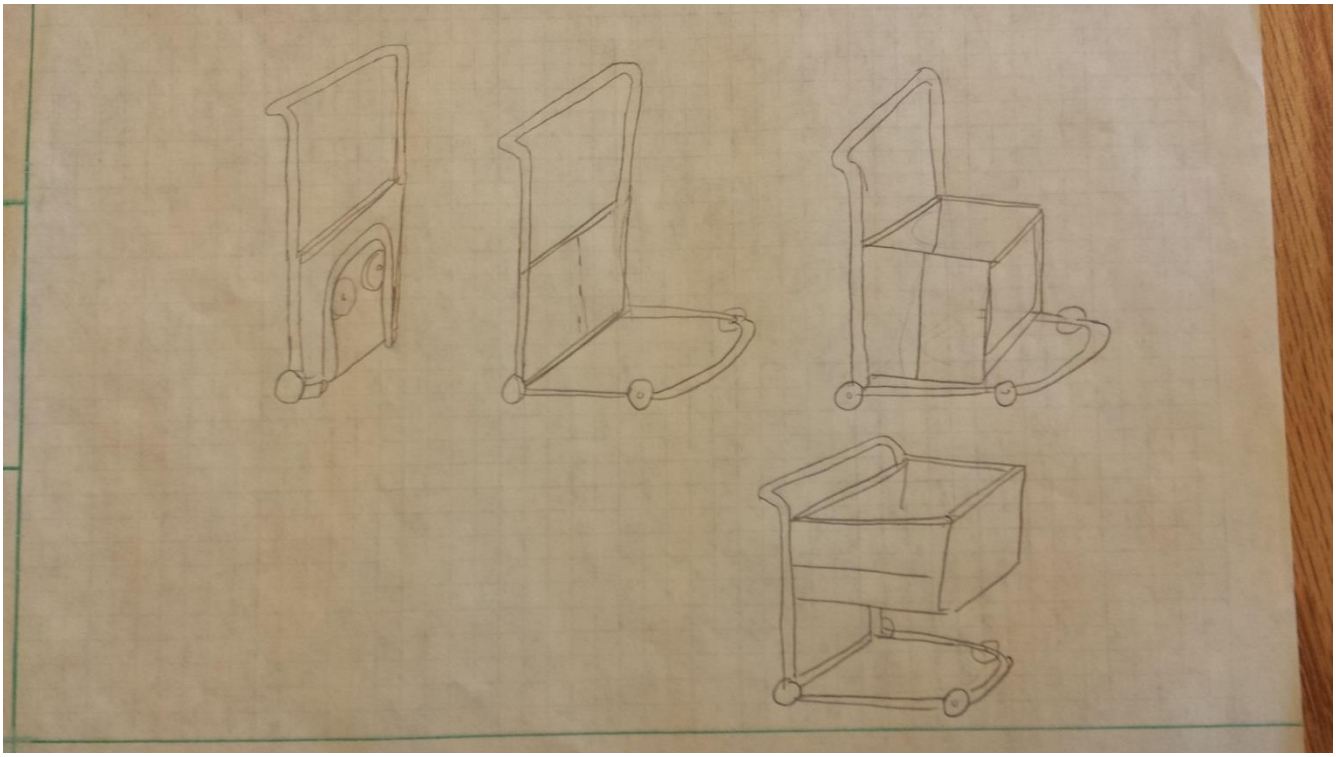

FIG. 7. Concept 5

Criteria	Concepts				
	1	2	3	4	5
Designer	Chris	Mohamed	Andrew	Derek	Chris
Simplicity	0	+	+	+	+
Number of Parts	0	+	-	0	-
Portability	+	0	+	-	0
Unfolding process	0	-	-	0	-
Compaction process	0	-	-	0	-
Sum 0's	4	1	0	2	2
Sum +'s	1	2	1	1	1
Sum −'s	0	2	4	1	3
Total Score	1	0	-1	0	-2
Rank	1	2	4	3	5
Comments	Overall good design; basis for comparison with other designs.	Simple design, very few parts; process for compaction/unfolding is not fully defined	Very simple design, Use of mesh is new approach; process for compaction/unfolding not fully defined	Simplest design of each concept; collapsing is simple, portability is lacking indefinitely	Too Complex of a design; too many parts; needs more revision

Table 3: Concept Generation Matrix

Final Design

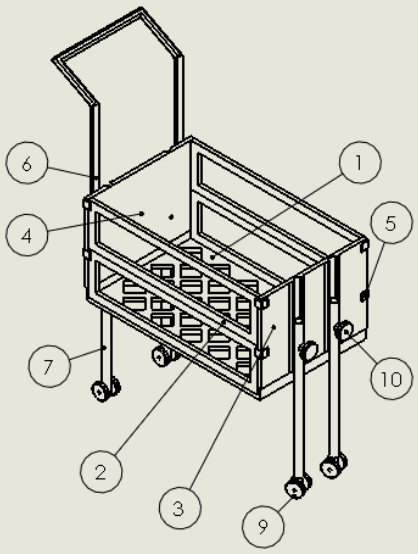

Part Number	Part Name	Material and Description	QTY.
1	Base	perforated HDPE base	1
2	SideWall	HDPE border with nylon mesh	4
3	FrontWall	HDPE grooves for leg support	1
4	BackWall	HDPE, grooves for leg support	1
5	Velcro	Attaches side walls to front and back Walls, 2 locations on each edge.	8
6	Handle	Aluminum Handle	1
7	Leg	Aluminum piping can separate from cart	4
8	FixedWheel	Wheel for back legs	2
9	CasterWheel	Caster wheel for front legs	2
10	Knob	Knob to loosen leg attatchment for rotation	4

PROPRIETARY AND CONFIDENTIAL

THE INFORMATION CONTAINED IN THIS DRAWING IS THE SOLE PROPERTY OF <INSERT COMPANY NAME HERE>. ANY REPRODUCTION IN PART OR AS A WHOLE WITHOUT THE WRITTEN PERMISSION OF <INSERT COMPANY NAME HERE> IS PROHIBITED.

NEXT ASSY | USED ON

APPLICATION

UNLESS OTHERWISE SPECIFIED:

DIMENSIONS ARE IN INCHES
TOLERANCES:
FRACTIONAL ±
ANGULAR: MACH ± BEND ±
TWO PLACE DECIMAL ±
THREE PLACE DECIMAL ±

INTERPRET GEOMETRIC TOLERANCING PER:

MATERIAL

FINISH

DO NOT SCALE DRAWING

	NAME	DATE
DRAWN		
CHECKED		
ENG APPR.		
MFG APPR.		
Q.A.		

COMMENTS:

TITLE:

Shopping Cart

SIZE A | DWG. NO. | REV

SCALE: 1:12 | WEIGHT: | SHEET 1 OF 5

5 4 3 2 1

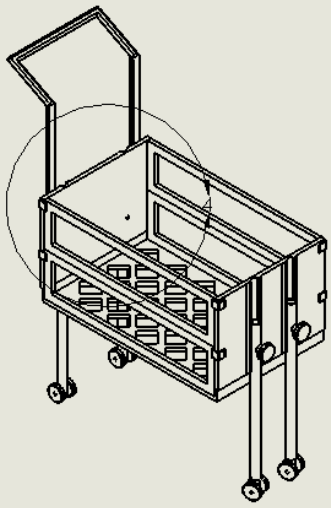

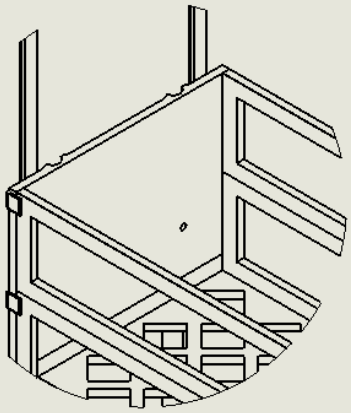

DETAIL 4
SCALE 1 : 6

BACK WALL
HDPE WITH GROOVES FOR LEG SUPPORT
HOLES FOR KNOBS

		UNLESS OTHERWISE SPECIFIED:		NAME	DATE
		DIMENSIONS ARE IN INCHES TOLERANCES: FRACTIONAL ± ANGULAR: MACH ± BEND ± TWO PLACE DECIMAL ± THREE PLACE DECIMAL ±	DRAWN		
			CHECKED		
			ENG APPR.		
			MFG APPR.		
		INTERPRET GEOMETRIC TOLERANCING PER:	Q.A.		
		MATERIAL	COMMENTS:		
NEXT ASSY	USED ON	FINISH			
APPLICATION		DO NOT SCALE DRAWING			

TITLE:

Back Wall

SIZE	DWG. NO.	REV
A		
SCALE: 1:12	WEIGHT:	SHEET 4 OF 5

PROPRIETARY AND CONFIDENTIAL
THE INFORMATION CONTAINED IN THIS DRAWING IS THE SOLE PROPERTY OF <INSERT COMPANY NAME HERE>. ANY REPRODUCTION IN PART OR AS A WHOLE WITHOUT THE WRITTEN PERMISSION OF <INSERT COMPANY NAME HERE> IS PROHIBITED.

5 4 3 2 1

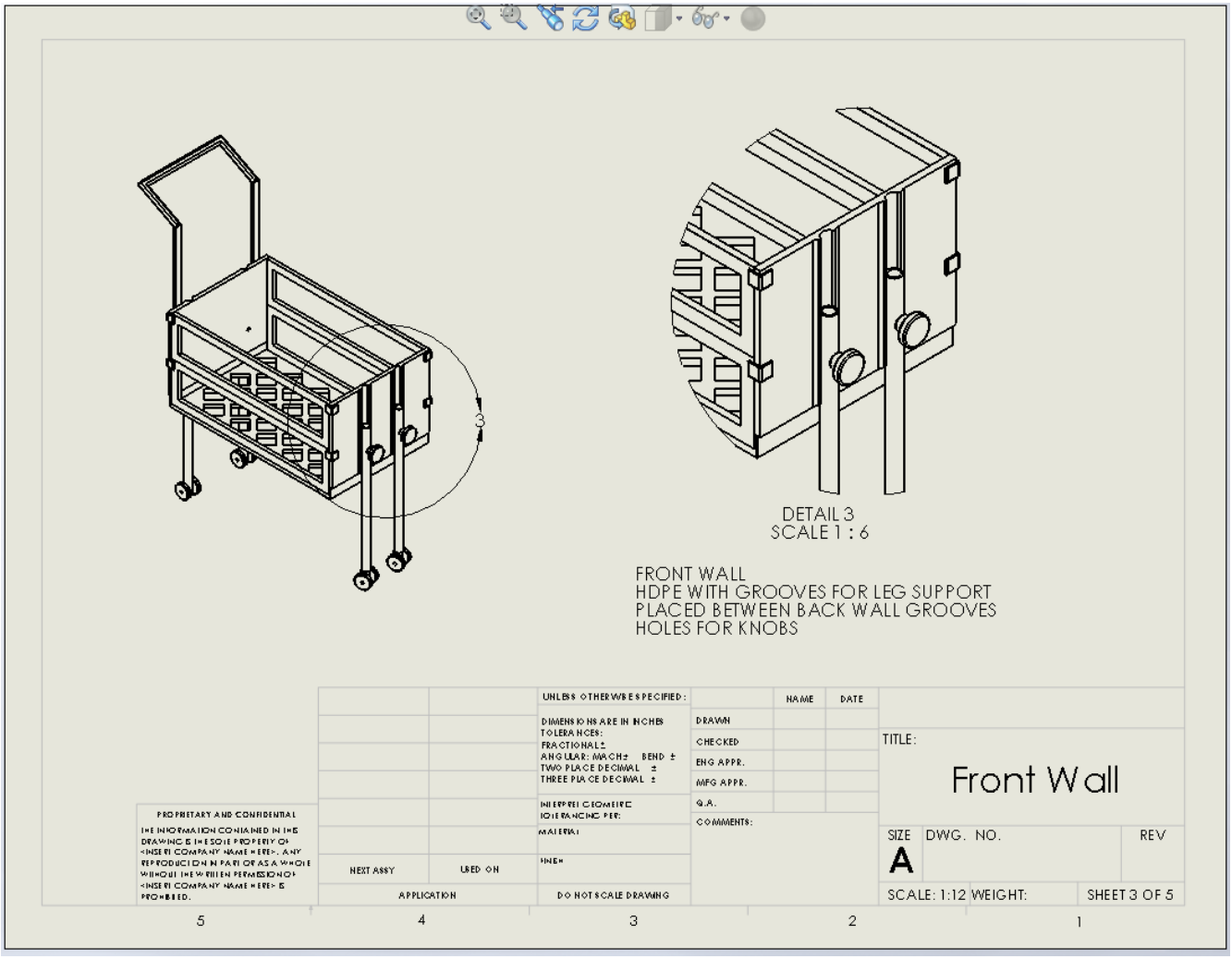
3
DETAIL 3
SCALE 1 : 6
FRONT WALL
HDPE WITH GROOVES FOR LEG SUPPORT
PLACED BETWEEN BACK WALL GROOVES
HOLES FOR KNOBS
UNLESS OTHERWISE SPECIFIED:
DIMENSIONS ARE IN INCHES
TOLERANCES:
FRACTIONAL ±
ANGULAR: MACH ± BEND ±
TWO PLACE DECIMAL ±
THREE PLACE DECIMAL ±
INTERPRET GEOMETRIC
TOLERANCING PER:
MATERIAL
FINISH
DO NOT SCALE DRAWING
NAME
DATE
DRAWN
CHECKED
ENG APPR.
MFG APPR.
Q.A.
COMMENTS:
TITLE:
Front Wall
SIZE
A
DWG. NO.
REV
SCALE: 1:12
WEIGHT:
SHEET 3 OF 5
PROPRIETARY AND CONFIDENTIAL
THE INFORMATION CONTAINED IN THIS DRAWING IS THE SOLE PROPERTY OF <INSERT COMPANY NAME HERE>. ANY REPRODUCTION IN PART OR AS A WHOLE WITHOUT THE WRITTEN PERMISSION OF <INSERT COMPANY NAME HERE> IS PROHIBITED.
NEXT ASSY
USED ON
APPLICATION
5
4
3
2
1

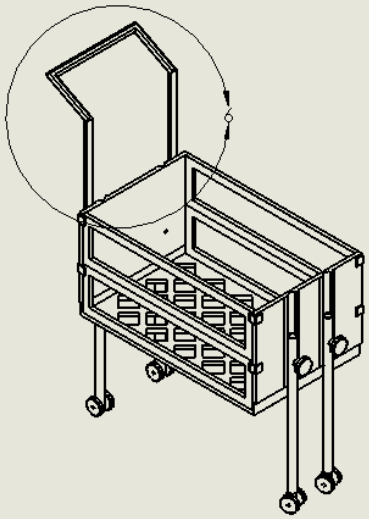

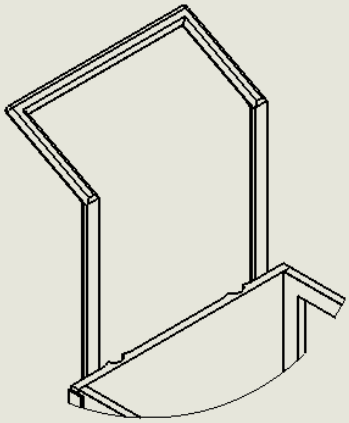

DETAIL 6
SCALE 1 : 6

HANDLE
HOLLOW ALUMINUM
FILLET EDGES NOT TOUCHING CART BODY

		UNLESS OTHERWISE SPECIFIED:		NAME	DATE
		DIMENSIONS ARE IN INCHES TOLERANCES: FRACTIONAL ± ANGULAR: MACH ± BEND ± TWO PLACE DECIMAL ± THREE PLACE DECIMAL ±	DRAWN		
			CHECKED		
			ENG APPR.		
			MFG APPR.		
		INTERPRET GEOMETRIC TOLERANCING PER:	Q.A.		
		MATERIAL	COMMENTS:		
NEXT ASSY	USED ON	FINISH			
APPLICATION		DO NOT SCALE DRAWING			

TITLE:

Handle

SIZE	DWG. NO.	REV
A		
SCALE: 1:12 WEIGHT:		SHEET 5 OF 5

PROPRIETARY AND CONFIDENTIAL

THE INFORMATION CONTAINED IN THIS DRAWING IS THE SOLE PROPERTY OF <INSERT COMPANY NAME HERE>. ANY REPRODUCTION IN PART OR AS A WHOLE WITHOUT THE WRITTEN PERMISSION OF <INSERT COMPANY NAME HERE> IS PROHIBITED.

5 4 3 2 1

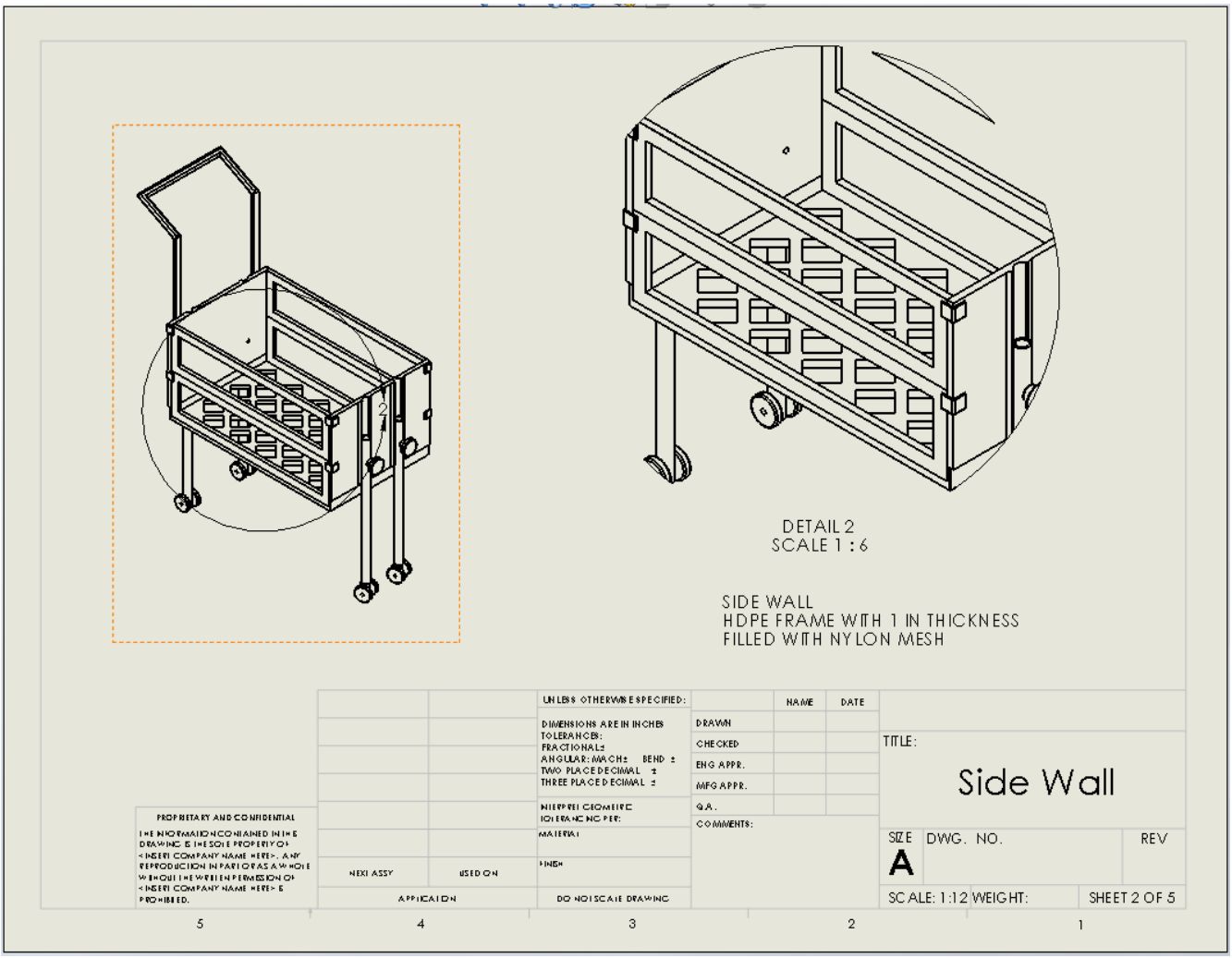
2
DETAIL 2
SCALE 1 : 6
SIDE WALL
HDPE FRAME WITH 1 IN THICKNESS
FILLED WITH NYLON MESH
UNLESS OTHERWISE SPECIFIED:
NAME
DATE
DIMENSIONS ARE IN INCHES
TOLERANCES:
FRACTIONAL±
ANGULAR: MACH± BEND ±
TWO PLACE DECIMAL ±
THREE PLACE DECIMAL ±
DRAWN
CHECKED
ENG APPR.
MFG APPR.
Q.A.
COMMENTS:
INTERPRET GEOMETRIC
TOLERANCING PER:
MATERIAL
FINISH
DO NOT SCALE DRAWING
TITLE:
Side Wall
PROPRIETARY AND CONFIDENTIAL
THE INFORMATION CONTAINED IN THIS DRAWING IS THE SOLE PROPERTY OF <INSERT COMPANY NAME HERE>. ANY REPRODUCTION IN PART OR AS A WHOLE WITHOUT THE WRITTEN PERMISSION OF <INSERT COMPANY NAME HERE> IS PROHIBITED.
NEXT ASSY
USED ON
APPLICATION
SIZE
A
DWG. NO.
REV
SCALE: 1:12 WEIGHT:
SHEET 2 OF 5
5
4
3
2
1

Prototype Scale 1:1

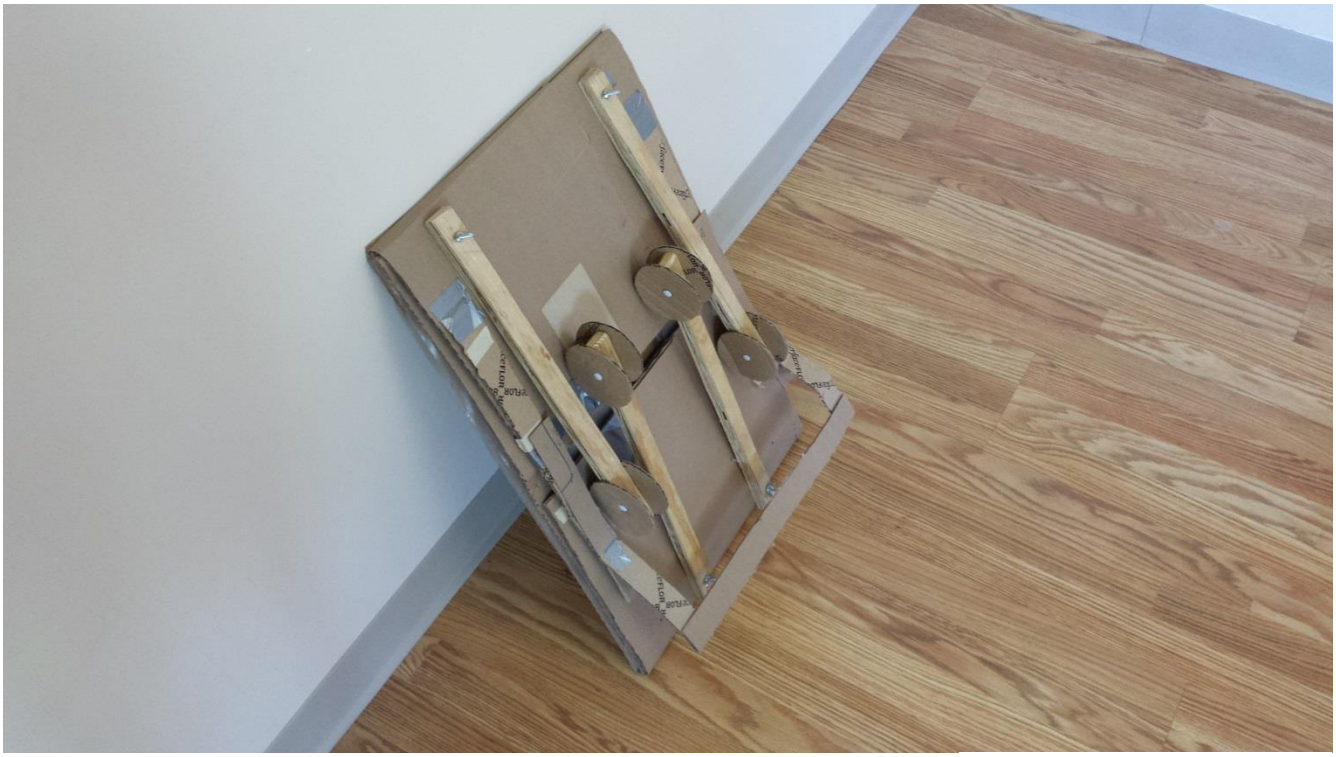

FIG. 2. Collapsed Prototype

FIG. 3. Expanded Prototype

Design Features

The Collapsi-Cart is built from aluminum and durable plastic. This makes for a sturdy yet maneuverable arrangement of parts that make the folding and unfolding of the cart quick and easy. The Collapsi-Cart is a flat rectangle while folded up in it's easy-carry position.

Operation Instructions

The steps to unfold from the folded position are:

1. Simultaneously lift front and back walls so that the back wall is perpendicular to the ground and the front wall rests on the ground out of the way.
2. Lift a single side wall and attatch both Velcro points to the back wall.
3. Repeat step 2 with the other side wall
4. Lift front wall up and lock into place by again Velcroing the side walls onto the designated spots
5. Loosen knobs for back wheels and rotate outward 180 degrees so that the legs are in their upright positions
6. Tighten knobs for back wheels
7. Repeat steps 5 and 6 for front wheels

The Collapsi-Cart is then up and ready for use in almost no time at all. To then return the cart to its initial collapsed state, undo steps 1 – 7 in the opposite order.

Engineering Analysis

Working Mechanism

The final design of our collapsible shopping cart incorporated the best features from each of the brainstormed designs. The cart's basket will be constructed of high density polyethylene to achieve a strong and durable, yet lightweight design. The floor of the basket incorporates a perforated design in order to minimize cost of materials and weight. Bifolding sides collapse against the base allowing the front and rear to collapse onto the sides. When in the collapsed position, the legs are rotated 180 degrees so that they do not protrude beyond the perimeter of the base. The legs must be secured in the expanded position by tightening the adjustment knobs on the front and rear of the basket. Once firmly tightened, the threaded knobs will effectively stabilize the legs in the molded grooves that lock the legs in place. The legs are made out of eighth inch thick aluminum pipes, which improve the stability and durability of the overall design. Front caster wheels allow the cart to be easily maneuvered, while the fixed rear wheels ensure that the cart maneuvers in a predictable manner.

Cost Analysis

QTY	AMOUNT	PART	COST ($)
	$8ft^2$	High Density Polyethylene	14.05
2		Polypropylene Fixed Rear Wheels	0.93
2		Casters	2.07
4		Aluminum Legs (1”OD .75”ID)	2.88
	16”	Velcro (1” wide)	1.19
4		Threaded Knobs	3.56
1		Aluminum Handle	11.32
	$4ft^2$	Nylon Mesh	3.77
		Total Cost	**54.97**

Conclusion:

We successfully engineered a collapsible shopping cart that meets all of the design criteria except for the price point of $50. Our shopping cart will cost only $4.97 more than the goal, though, and it is absolutely worth it so that the durability and stability of the cart are not compromised. Our design is still very cost effective; each part was designed as cheaply as possible while still meeting the needs of the customer. Our cart will provide a method of transporting goods into the home without the need to make several trips carrying bags a few at a time.