# The Cook-EZ

## Sponsor: Shell

## Course: Engineering Design 100 Section 017

## Team S.A.I.D.

## Submitted to: Andy Lau

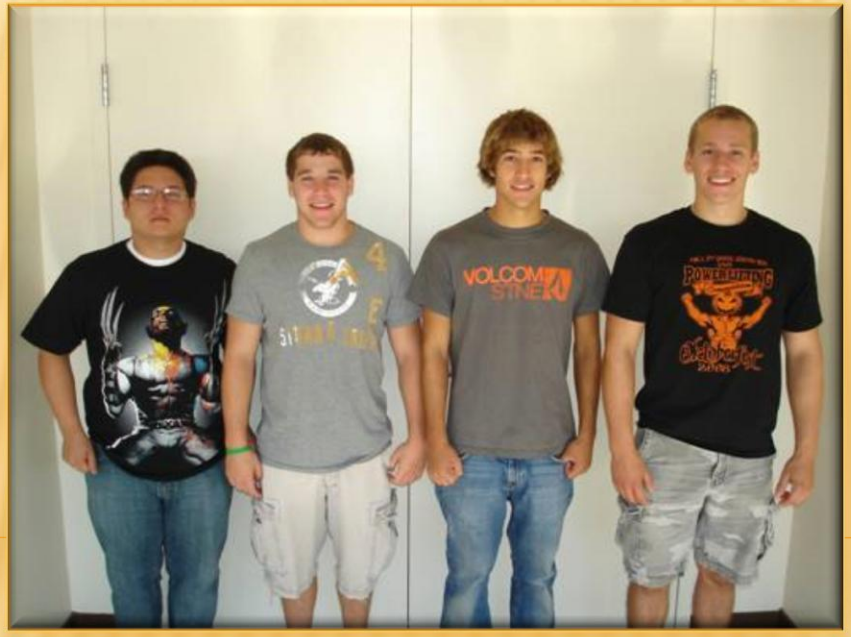


Team Members: Walter Delgado (wjd5072@psu.edu), Chris Ignozzi (cji5017@psu.edu), Brian Avison (bda5036@psu.edu), Keegan Schoch (kts5097@psu.edu)
Note: Emails linked to Personal Websites

# SUMMARY

- This project has arisen from the need of a better way of cooking for the people of Nyeri, Kenya.
- The subsequent information is a compilation of the problems we have derived from cooking in Kenya, the research and analysis we have done in order to combat these issues, as well as our design proposal for a better stove.
- Contents:
  - Slide 1: Title Page
  - Slide 2: Summary
  - Slide 3: Problem Statement
  - Slide 4 and 5: Research
  - Slide 6 and 7: Analysis
  - Slide 8, 9, 10: Detailed Description of Design
  - Slide 11: The Benefits of the Cook-EZ

# PROBLEM STATEMENT

- The problems with cooking food in Nyeri, Kenya are numerous. To begin with, electrical appliances are not an option, and the funds to purchase electricity or electrical appliances are also not available in this poor area of Africa. Many natives of Nyeri employ primal methods of preparing meals, generally cooking over a standard wood fire, or simple stoves. The issue with this is that it is costly and inefficient, resulting in further deforestation and overconsumption of natural resources. Not only are the cooking methods inefficient and environmentally detrimental, but these methods also result in negative health effects from the indoor air pollution created by these primal methods of cooking. Team SAID's design will attempt to meet the needs for efficiency, better air quality, and affordability in a cooking stove.

# RESEARCH

- Ways to reduce heat loss:
  - Better insulation (Perlite)
    - With better insulation such as perlite or vermiculite, the heat loss through the exterior of the stove could be significantly reduced. With the most popular model, the Jiko, there is little to no insulation.
    - With reduced heat loss, this would cut down on cooking time, reduce indoor air pollution as well as fuel reduction.
  - Oxygen access improvements
    - Even with the significantly improved design of the Envirofit, there is a lot of heat loss through the oxygen intake. The Envirofit allows oxygen in through a large, open hole in the side, allowing a considerable amount of heat to escape into the atmosphere without heating the food.
  - Pot location
    - In the standard models used in this region of Africa, the pot is allowed to sit on top of the stove. This also results in a lot of heat loss through convection.
    - A better design would incorporate the idea of keeping heat loss to a minimum through a better pot situation.

# RESEARCH CONTINUED

- Materials
  - The material used to build the stove must be heat resistant in order to prolong the life of the stove, making it more efficient and thus cutting down on the overall costs.
  - Affordability must also be a large consideration. Even if the design is excellent, the people of Nyeri will be unlikely to purchase a stove which costs too much. The average annual income of the Kenyan is $360. A stove which costs $36 dollars would be 10% of their yearly income.
- Fuels
  - Charcoal
    - Charcoal is the most practical, affordable, renewable, and economically stimulating fuel for this region. Charcoal is created by burning wood without the presence of oxygen, which can be done in a simple kiln.
    - Charcoal also has a comparatively high caloric value to wood.
  - Stove should also be able to burn other biomass fuels
    - The people of Nyeri also have access to other biomass fuels such as dung and plant life other than trees.

# ANALYSIS

- Our design proposal was based off of the current models of stoves used in Kenya, from the popular but basic Jiko (bottom left), to the more advanced Envirofit (bottom right).
- The idea was to make improvements, but basing our ideas off of current models which have been accepted culturally.

# ANALYSIS CONTINUED

- In testing the concepts of cooking more efficiently as a class, we determined the amount of energy needed to cook two cups of rice.  By conducting this experiment, we would be able to determine how much energy was necessary  for the average Kenyan meal.
  - We found the amount of energy to be approximately 200 Watt Hours.
  - We also tested cooking the rice by using a radiation shield to see how much energy it would conserve; the results showed that the radiation shield was an insignificant attachment.

# OUR DESIGN

- Prototype Photos:

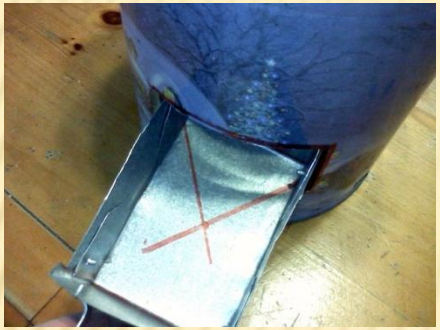

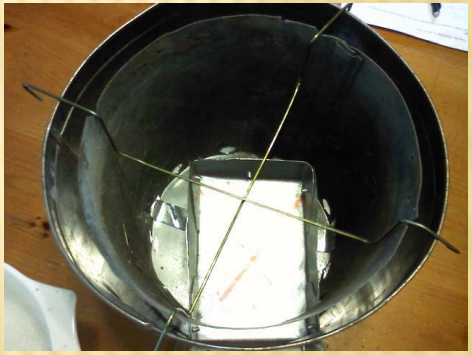

- Overall ideas:
  - A fuel tray, as shown in the top left photo, would allow easy fuel access but prevent heat loss through an opening like the Envirofit's.
  - As seen in the middle photo, we placed the pot down inside to avoid heat loss through convection; this method not only loses less heat, but also heats the sides of the pot as well as the bottom.
  - The pot sits on "crosshairs" which allow it to sit slightly above the top for easier pot removal as well as pressure release. The "crosshairs" also allow a larger pot to sit on top because they prevent pressure buildup, avoiding pot size restriction.

# DESIGN ASPECTS CONTINUED

- Oxygen intake holes are located beneath the combustion tray/chamber. This avoids the heat loss through an open hole, while still providing the appropriate amount of oxygen for full combustion.
- The vents on the back of the stove permit exhaust release, as well as a dilution of the pollutants from the combustion. The location of the vents redirects the pollutants from the cook's immediate atmosphere.

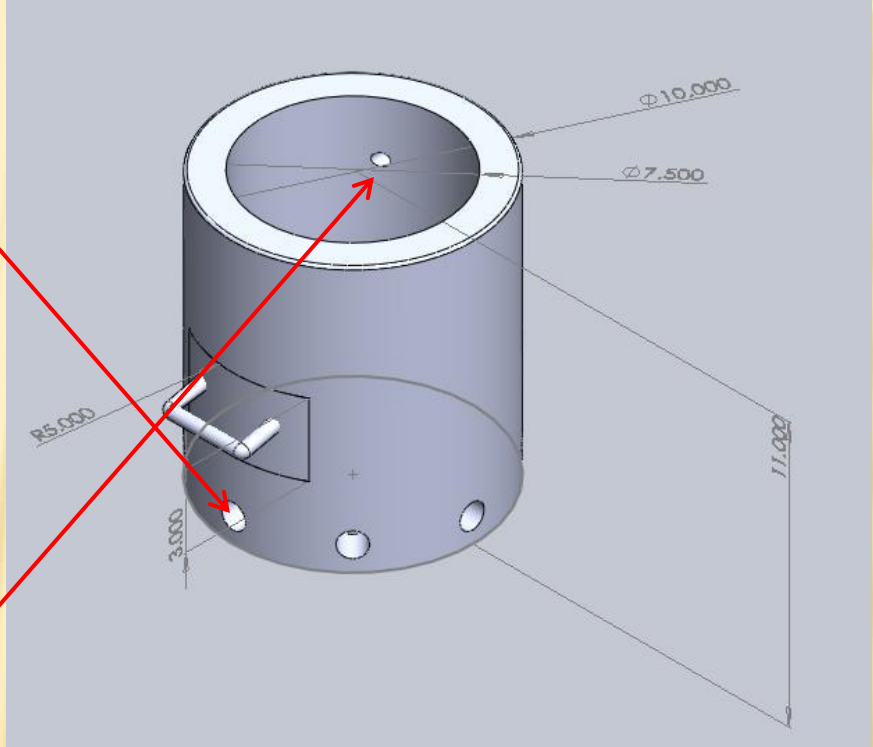

# DESIGN ASPECTS CONTINUED

- The double wall permits a 2.5” layer of insulation (of perlite which is cheaper and has a higher insulating value than vermiculite, the more common insulating material) between the walls; this also prevents heat loss, cooking food faster and more efficiently.

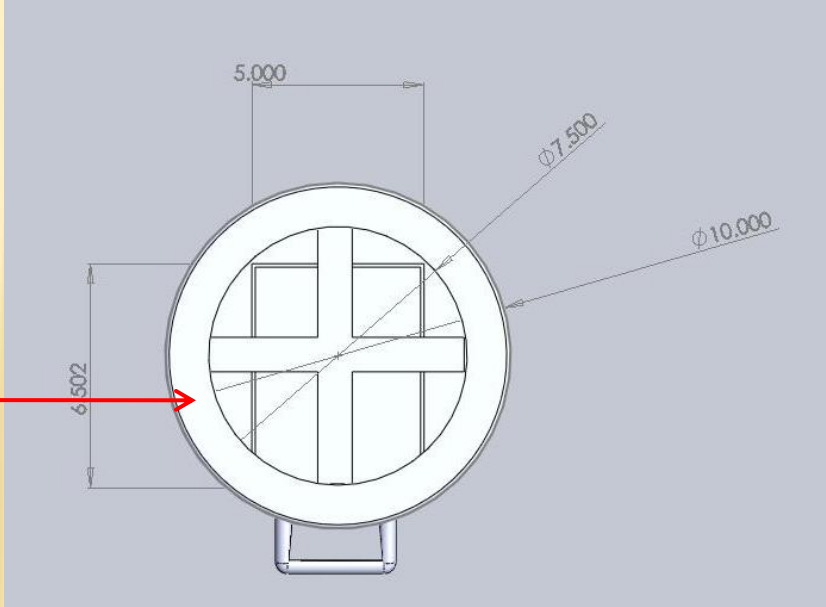

# OVERALL DESIGN

- Our “Cook-EZ” promotes all of the ideals presented in problem statement, as well as addresses the issues with the current models.
- Through aspects such as the oxygen intake, pot location, and insulation, we prevent heat loss, promote efficiency, cost effectiveness, and safe cooking with less indoor air pollution for the people of Nyeri, Kenya.
- Thank you for your interest in Team SAID’s Cook-EZ stove.