GE Transportation

Statement of Work for No Grid Telecom Base Station Energy Storage System

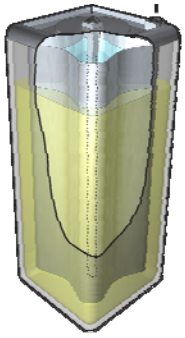

EDSGN 100: Intro. to Engineering Design

Fall 2010 Client-Driven Design Project

Penn State

Revision History

Rev.	Release Date	Author	Change
0	9-23-10	MP Sirak/C Chuah	Initial Release
1	10-2-10	S Bilén	Revised to include EDSGN 100 goals
2	10-5-10	S Bilén	Final Release Version

Project Objective :

Design a telecom cell phone base station system that uses sustainable energy sources (e.g., solar panels, a small wind turbine, geothermal, etc.), a diesel generator system, and sodium metal halide (NaMx) battery to optimize GREEN power used to run the base station. The system should optimize available power in areas with either no energy grid or an unreliable energy grid, and also illustrate environmental benefits of replacing the typical current solutions. The design should be feasible to implement with minimal resources and reusable across developing regions.

Sponsor Background:

GE is a diversified infrastructure, finance, and media company taking on the world's toughest challenges. From aircraft engines and power generation to financial services, medical imaging, and television programming, GE operates in more than 100 countries and employs about 300,000 people worldwide.

GE has a strong set of global businesses in infrastructure, finance, and media aligned to meet today's needs, including the demand for global infrastructure; growing and changing demographics that need access to healthcare, finance, and information and entertainment; and environmental technologies.

In 2009, GE delivered solid results despite the tough economic climate with earnings of $11.2 billion. Industrial cash flow from operating activities for the year remained strong at over $16.6 billion.

GE traces its beginnings to Thomas A. Edison, who established Edison Electric Light Company in 1878. In 1892, a merger of Edison General Electric Company and Thomson-Houston Electric Company created General Electric Company. GE is the only company listed in the Dow Jones Industrial Index today that was also included in the original index in 1896.

General Electric - Imagination at Work

Project Description:

GE is developing energy storage products for uninterrupted power supplies (UPS) and telecom applications. A typical telecom application involves providing power to a base-station cell tower. The equipment power is generally provided at –48 VDC, and is often needed in locations where a connection to a utility grid is not available, in particular,

countries in Africa and Asia. A typical telecom base station schematic can be seen in Figure 1.

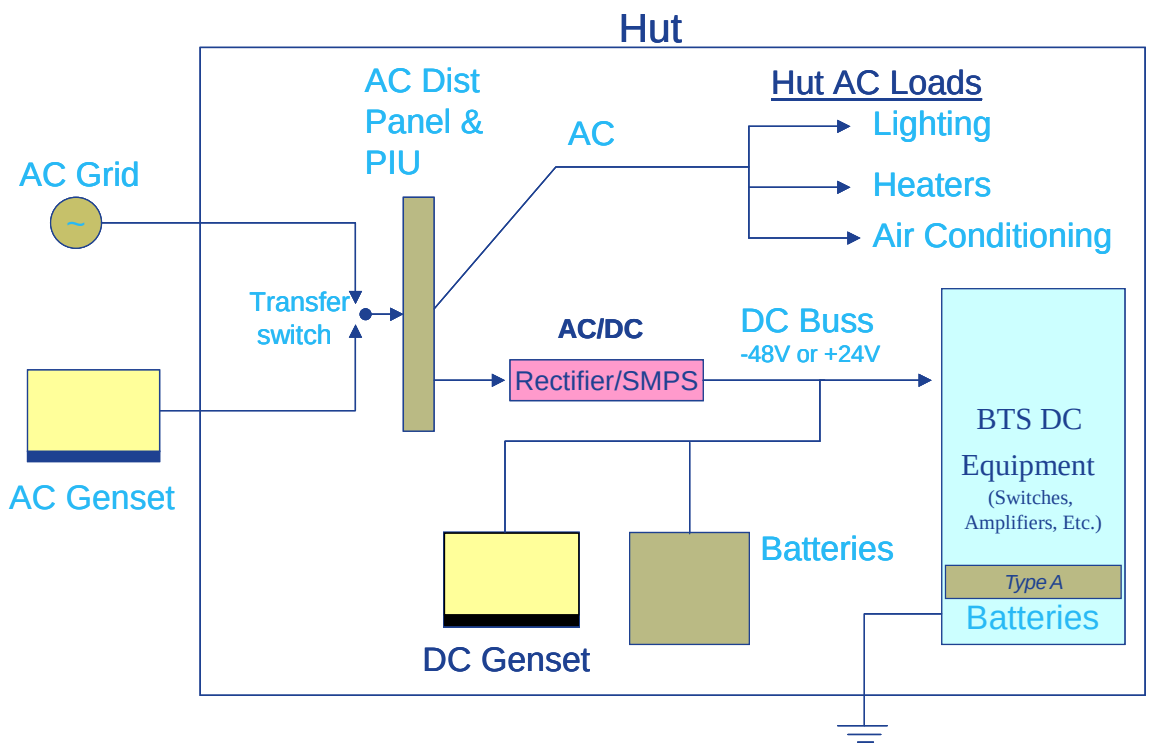

Figure 1 – Typical Telecom Base Station

The base station shown in Figure 1 is connected to an AC grid with a back-up AC generator set. In these applications, the base station will receive its power exclusively from the AC grid, with batteries being used as primary back-up power in the case of a grid outage. However, in countries with unreliable grids, or where grid connection is not feasible, then these base stations will utilize a diesel driven DC generator set, with batteries, and will operate in a "hybrid" cycle, where the DC generator will run for a certain number of hours, while providing power to the base station and charging the batteries. The generator will then shut down and power is provided exclusively by the batteries. This duty cycle can optimize the efficiency of the system, resulting in lower operating costs. Given the high cost of diesel fuel, it is desired to utilize supplemental alternate forms of energy, such as wind and solar power.

Project Requirements:

It is desired to take the telecom base station shown in Figure 1 and redesign it to incorporate the following features:

1. *Choose a country that would have the likelihood of applying this base station in a NO GRID application. Research the environmental resources and conditions in this area.*
2. *The telecom base station will have a constant 1.2-kW load, needed at the BTS DC Equipment. The BTS DC Equipment will operate at –48 VDC. Additional loads needed for the Hut AC Equipment are dependent on the geographical location and can be determined by the design team.*
3. *Select the following components to provide power for this application:*
    a. *Diesel Driven DC Generator Set*
    b. *Alternative energy source (e.g., variable speed wind turbine system, solar array, geothermal, etc.)*
    c. *Sodium metal halide batteries for energy storage*
    d. *Appropriate Hut equipment for environmental protection of the electronics*

    Note: GE manufactures many of these components and it is desired to supply a GE integrated system as much as possible.
4. *Integrate these components into a system that will work in a suitable "Hybrid" application, leveraging the use of all the components in the most optimum manner to save operating costs.*
    a. *What are the recommended component sizes and operating speeds?*
    b. *How would these components function together in an optimized manner? Cycle times? System block diagram? Connection times?*
    c. *Propose simplified control algorithms for an optimized system.*
    d. *What are the expected upfront and lifecycle cost estimates?*
    e. *What are the expected yearly maintenance costs?*
5. *Discuss social implications of such a project in the country chosen; what is the impact of improving the telecom infrastructure?*

<u>Project Deliverables:</u>

The design team will present an optimized system, covering all of the requirements above.

Note: Your instructor will clarify his or her expectations for these deliverables and their respective due dates.

- *Technical report on Web*
    - *The format for the first page of your website will be given to you and all requested material must be provided*
    - *Project description*
    - *Trade studies*
    - *Overview of project location and geographical considerations along with a summary of suspected cultural impacts of the telecom infrastructure—both positive and negative*
    - *Systems diagram*

- *CAD drawings detailing the design solution(s) for the system concept*
- *Prototype/model of system or system element*
- *Complete list of design concepts showing top 4–5 initial selections*

Materials Provided:

- *Reference material and websites on project-relevant materials*
- *Website for design project:*
  http://www.edp.psu.edu/design_projects/edsgn100/fa10
- *Catalog and product brochures of relevant products*
- *Additional materials will be provided as the semester proceeds*

Attachments: None