GE Transportation Project

No Grid Telecom Base Station

EDSGN 100 Section 004

Team #8

Submitted to: Prof. Liz Kisenwether

December 13, 2010

From Left to Right: Lucas Angelini, Hashim Akeel, Sabih Khatri and Charlie Garlisi

Project Summary:

Our team was given the challenge to design a no-grid telecom cell phone base station that limits the use of diesel fuel and that provides cell phone coverage in new regions of developing countries. Our team focused on a design made specifically for the Andes region in Columbia which used only solar and wind power to power the whole station. The need for a diesel generator was completely eliminated by using such a model. Our waste energy, though relatively small, was used to power the lighting and heating systems which helped make the base station even more efficient.

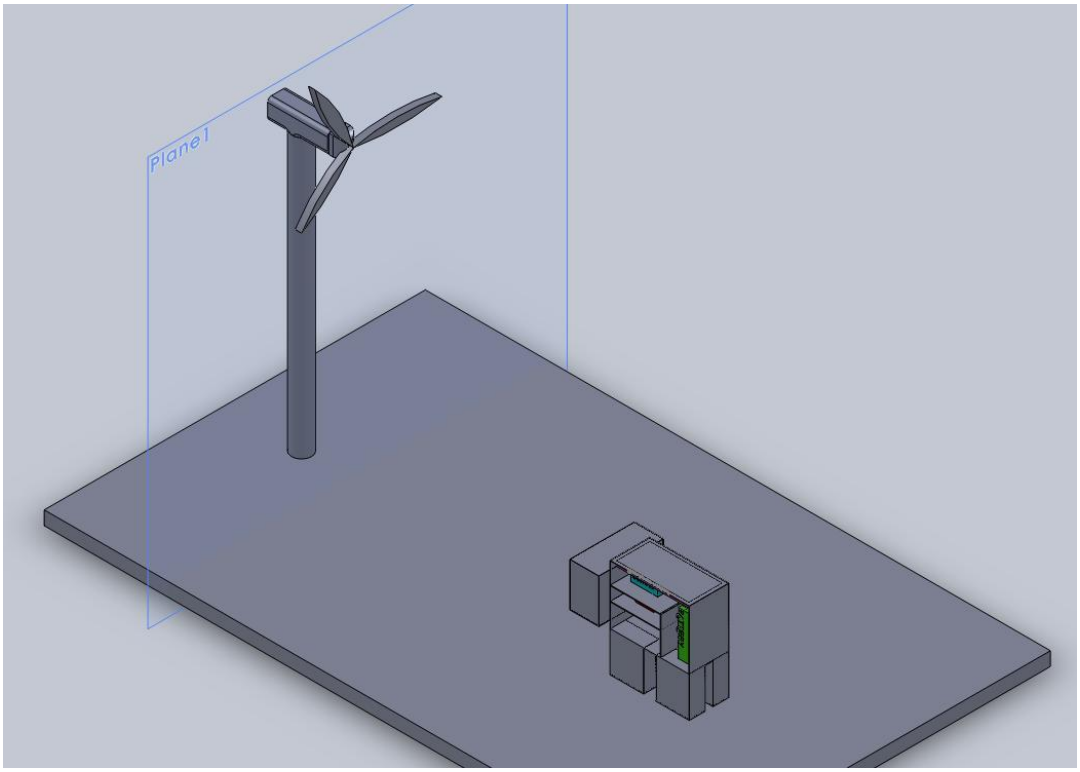

**Solar panels not displayed on CAD model due to large number of panels needed.

Table of Contents

Project Description:	3
Possible Project Location	3
Costing	5
CAD Drawing	6
Business Case	6
Lessons Learned	7

Project Description:

GE Transportation provided several objectives for this project. The main objective was to develop and design a telecom base station that ran either fully on renewable resources such as solar, wind, hydro and geothermal or was a hybrid that efficiently used as much renewable resources as possible and used a diesel generator only when inputs from renewable resources didn't provide enough power to run the station. GE also required that teams use their batteries as another source of energy if renewables weren't enough. The team also had to choose a location where certain specifications had to be met. The location chosen was to be a developing region and had to have viable source(s) of renewable energy. It also had to be a region where cell phones were rather popular and more cost effective than landlines. GE also included electrical requirements. The first was that the stations energy systems had to provide a constant 1.2 kW of power indefinitely to keep the cell phone tower running. Secondly to the stations systems have to run at -48V DC to keep all DC equipment running at maximum efficiency.

Project Location:

Our team initially began looking for regions that featured high temperatures, high solar radiations, and high wind speeds. We came up with a list that included Chile, Somalia, Venezuela, and Columbia. However the decision became unanimous to use Columbia when we realized its high renewable energy potential.

Columbia has five distinct regions each of which have varying temperatures. The following graphs give the temperature ranges in Celsius of a city in each of the five regions.

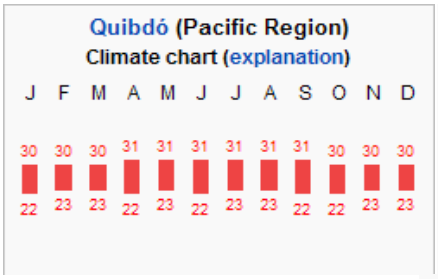

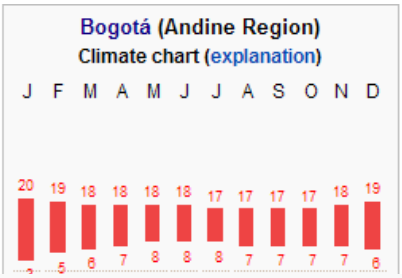

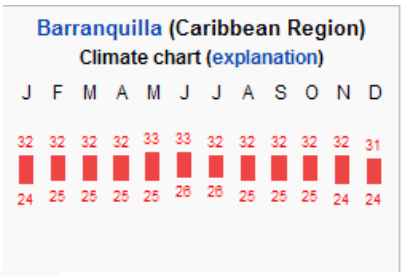

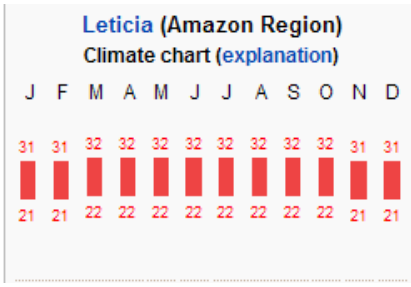

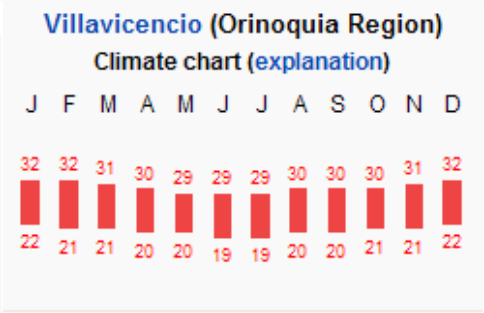

Our initial interest in Columbia was definitely sparked by the Guajira Department. This is a region in northernmost Columbia where the average daily radiation is 6.5kWh/m^2 and average wind speeds are over 10m/s. The theoretical wind power for this one region alone is 21 GW of which only 19.5 MW has been tapped. We then learned that the country also has high geothermal potential in the Azufral volcano and that the country has an estimated 118GW of potential hydropower.

With all this information gathered, we decided to start planning how we would use this information to design a very efficient base station. The plan was at first to design a base station for the Guajira Department that used mostly wind power with some solar power to eliminate the use of a diesel generator. However, we could not do this because unfortunately there was no TMY data for any area of Columbia. Our plans changed when we found energy+ data on Bogota Columbia. The problem was that Bogota is situated in the much colder region of Columbia, where the solar radiation is not as high. However, we changed our goal for the project at this point and decided to go in a direction that other teams didn't go, developing a base station that does not rely on a diesel generator in a colder region than any other team.

Using the information we gathered on Bogota from energy+, Andy Lau's GE Stand-alone Cell Tower Analysis spreadsheet, and 10 foot wind turbine diameter, a 21kW PV array, and 24 kWh effective battery capacity we were able to calculate the following:

Turbine output	44kwh
PV output	565kwh
Generator output	0kwh
Generator fuel	0gal
Generator hours	0hr
Dump energy	181kwh

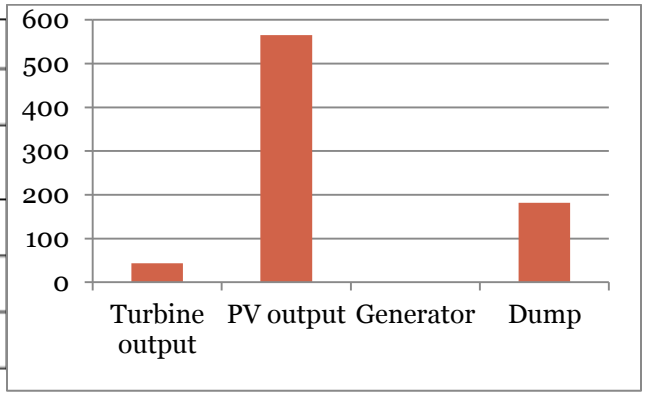

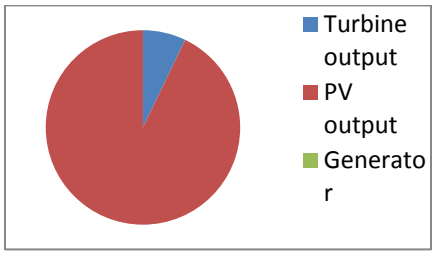

We were able to design an efficient renewable energy powered no-grid telecom base station that eliminated the need for a diesel generator in the much colder region of the Andes Mountains, specifically the Bogota region.

Costing

After determining the materials we needed to find, we decided to find the most cost efficient parts to our specific design. The following shows the final chosen costs for the parts needed:

Component	Price per Unit ($)	Quantity	Total for Component ($)
10' Diameter Wind Turbine	1,349.99	1	1,349.99
Solar Panels	680	86	58,480
Charge Controller	500	8	4000
Battery	12,000	1	12,000
TOTAL			75,829.99

CAD Drawing:

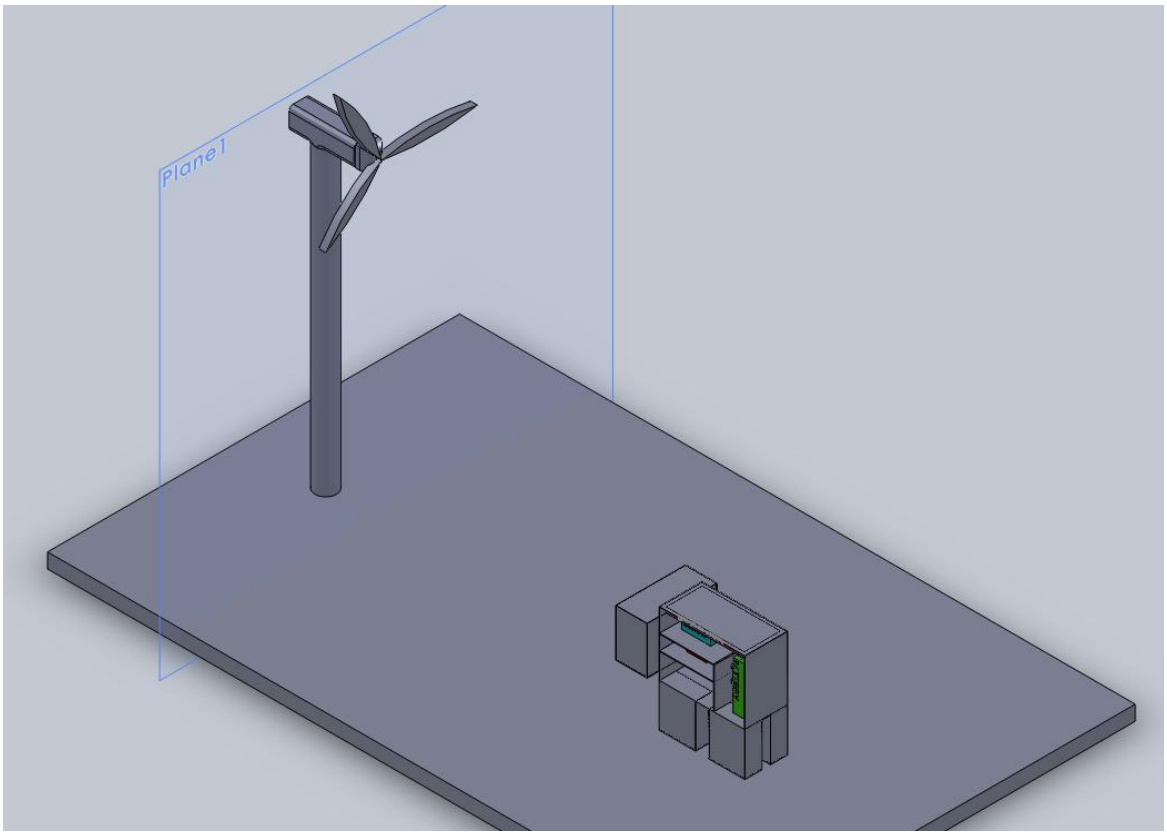

Our CAD model features one sole 10ft diameter turbine and the real model has 86 solar panels. The 86 panels were not included in the CAD representation due to the large number of panels needed.

Business Case:

Due to the fact that our team was not able to use TMY data but used energy+ data instead our calculations for a specific payback period remain incomplete due to a problem that arose in the spreadsheet. Our spreadsheet kept telling us that if only the diesel generator was used, only 19 gallons of fuel would be used an entire year, which is realistically not possible. However, due to the large price of our base station, we estimate that the payback period is around eight or more years. Though this larger payback period may not make us standout, the location of the base station does. Though this particular model of the station is designed specifically for Bogota and the Andes Region, Columbia is still one of the best countries to take advantage of natural resources. Because of this, our base station can be customized to use whatever source and amount of natural resources a region in Columbia has at its disposal and this is why our base station is deployable not for one specific region but for an entire country regardless of varying climate.

Lessons Learned:

The main thing that our team has learned from this project is that teamwork in any design process is absolute key. Due to the large amount of deliverables, data to be collected, and things to be designed, splitting up the responsibilities and making it so everyone had an equal share of work to do, made it so that the project ran smoothly and got done. Our team also learned that in projects where there are many different solutions, thinking outside of the box helps. Almost every team, except for ours chose to use an area that had relatively hot temperatures. We however in the end were able to design a system that worked in temperatures colder than that of mostly every team.