Chad Fennelly

Dual Shock Three

I picked the Dual Shock Three because I wanted to pick an object that sparked my interest, and videogames are among a few things that appeal to me. I also wanted to challenge myself on this assignment. I wanted to attempt an object complex yet not too difficult to replicate. For these reasons, I chose a videogame-related device. I chose the Dual Shock Three (Figure 1.). It is the wireless controller to my PlayStation Three console.

The most difficult part of this project was accounting for the depth of the object. The object had multiple depths. This factor was hard to overcome. Using multiple planes and complex geometries to achieve the correct shape was quite a task. Getting the depth just right was something I was not able to fully accomplish. If I were to do this project over, I think I could have gotten it right. I would have made multiple planes from the start. I also would have made more separate pieces, done an assembly, and mated them appropriately. This would have made the object as a whole turn out much better.

By doing this project I learned the reasonability of creating a complex object on Solidworks. Although it can be time consuming, I realized some of the possibilities of the Solidworks. The project made me helped me further learn the Solidworks software and become more prepared and familiar with what is to come in my engineering future at Penn State.

There were times where I came across an obstacle and got frustrated with the assignment and myself. However, I enjoyed pulling my project together. Upon completion I had feelings of fulfillment and reward. I would say overall that it was a fun experience.

Figure 1. The figure to the left is the Dual Shock Three controller for the PlayStation Three. This is the basis of my personal CAD project and what I used to create my object.

Source: http://upload.wikimedia.org/wikipedia/commons/6/63/PlayStation3-DualShock3.jpg

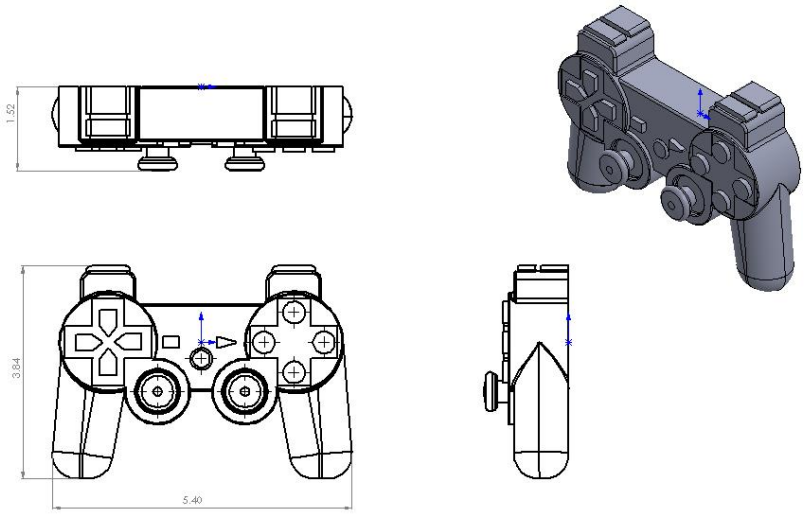

Figure 2. The figure above contains the front, top, right, and isometric views of the Dual Shock Three. The dimensions in the drawing are on an exact 1 to 1 scale, and the dimensions are in centimeters. The dimensions of the overall object are shown and a more detailed view of the object can be seen in 3-dimensional isometric view.