Technical Memorandum
No. 4815162342

Date: April 20, 2016

To: Lockheed Martin Corporation

From: EDSGN100 Section 002
Seal Team 6
Edward Li
Matthew Schoffelmeer
Chase Thatcher
Charles Marron

Subject: Penn State University
EDSGN 100: Introduction to Engineering Design
Client-Driven Design Project, Spring 2016

Purpose The purpose of this memorandum is to lay out the process that was used to develop a design to modify an additive heat exchanger, presumably of a forced air type for use with electronic components, for Lockheed Martin. This shall lay out the background studies of heat transfer that led to the development of the initial ideas as well as the final results of these studies leading to the final result. The memorandum will also discuss further ideas and recommendations within the bounds of the information that was initially provided in the design brief from Lockheed Martin.

Background The objective of this project was to design a more efficient forced air heat exchanger for electronic components based upon a partially designed solidworks file provided by Lockheed Martin.

Sponsor Headquartered in Bethesda, Maryland, Lockheed Martin is a global security and aerospace company that – with the addition of Sikorsky – employs approximately 126,000 people worldwide and is principally engaged in the research, design, development, manufacture, integration and sustainment of advanced technology systems, products, and services.

Project Description Lockheed Martin provided the following five different options for the project: a heat exchanger, a sensitive payload shock absorber, connector backshells, a USB hub mounting bracket, or a redesign of another Lockheed Martin product that could be improved with additive manufacturing. Of these five options, the heat exchanger project was selected because it is the best fit and most practical for additive manufacturing.

The purpose of this project is to redesign a traditionally manufactured air-flow through heat exchanger for additive manufacturing (AM). Air-flow through heat exchangers utilize

metals with favorable heat transfer coefficients and thin-fin structures to remove heat from circuit card assemblies (CCA). These exchangers are typically built using a combination of CNC milling and brazing. These production methods can create long lead-times and extra cost. Redesigning an exchanger for additive would decrease the lead time from multiple months to several weeks.

In order to complete the project, the original heat exchanger must be analyzed and evaluated. By studying the original heat exchanger for its flaws, modifications can be developed to improve improve the performance of the design. Further, the proposed modifications must be evaluated and the best solution must be selected to be implemented into the design in which a prototype will be constructed from additive manufacturing.

Procedures To modify the existing heat exchanger for additive manufacturing and increased efficiency, research was conducted to gain insight to how heat exchangers function and dissipate heat. Diagrams of existing exchangers were analyzed for such insight, as seen in **Figure 1**. Using this information, we generated our own design to take advantage of the benefits of a forced air heat exchanger over a passive heat exchanger. Upon deciding that it likely had some source of forced air, the provided .stp file was used as a template for the design. From the layout of the original .stp file, as seen in **Figure 3**, it was decided that heat would propagate from one side of the unit where the circuit card assembly would be. After making these assumptions, the existing fins in the .stp file were cut out, therefore making a clean template for the new design. The new fins were then able to be inserted and the design was completed.

To establish a design, research was conducted to determine the new design of the internal geometry of the heat exchanger and the type of material that should be used. Based on the enclosed design of the original heat exchanger the assumption was made that there is likely some sort of forced convection through the shelf-like geometry. In order to take better advantage of the forced convection the amount of shelves were decreased but vertically oriented fins were added to each shelf to increase the surface area. The length of the fins decrease linearly from the side of heat propagation in order to allow each fin to be equally efficient conductively based on the equation $\dot{Q} = kA\Delta T/L$ in which $\dot{Q}$ is the rate of heat transfer, L is the thickness of the material (the length of the fins from the closest point of heat propagation), k is the thermal conductivity of the material, A is the surface area, and ΔT is the temperature difference(see **Table 1** for references). Additionally, the linearly decreasing pattern still allows for air-flow through the heat exchanger to maintain a relatively high convective heat transfer coefficient by leaving space for the air to pass through. Moreover, various materials were analyzed for their thermal conductivity in this process, and it was found that silver was the one of the most conductive materials followed by copper as displayed in **Table 2**. According to **Table 3**, however, aluminum, which also had a relatively high thermal conductivity, is significantly more cost effective to use as opposed to silver and copper and much less dense;, saving both weight and money. However, copper would be a good alternative if the conditions are such that it would not corrode, which causes a decrease in the ability to transfer heat, and if weight savings are not an issue. Other materials were considered based on

extremely high thermal conductivity values, such as diamond and graphite, however they are either not practical for additive manufacturing applications or overly expensive.

Once the orientation of the fins and the material of the heat exchanger were established, the design was created in the .stp file. From the step file, a sample of the individual sections of the heat exchanger was taken and converted such that it could be inserted into MakerBot to be 3D printed. The 3D model provided a prototype so that the general idea of the concept. Due to the the nature of the prototype (a polylactic acid 3D printed model) no further testing could be completed without access to proper materials and manufacturing processes, or further details as to what the application will be.

Results and Discussion After analyzing data from various sources, most notably those in **Table 2**, **Table 3**, and it was determined that the heat exchanger shall be made out of aluminum due to the fact that it was significantly more cost effective than silver and copper, and while it had a lower heat capacity and thermal conductivity satisfactorily efficient. From **Table 1** we could deduce that it was most efficient to add fins in the forced air application because increased surface area improves the ability to dissipate heat under natural convection as well as forced convection applications. The original .stp file for the heat exchanger, assuming it was a preliminary design, would have been limited by the rate of convection because of a lack of surface area as well as a poor distribution of the conductive heat transfer paths, as displayed in **Figure 3**. The new arrangement of the fins, as displayed in **Figures 4a and 4b,** increases the surface area allowing for a higher conductive distribution of heat as well as increased surface area in order to allow for a higher rate of convective heat transfer.

Conclusions and Recommendations After making a cursory investigation into heat propagation and heat exchanger design, it is recommended that an aluminum prototype heat exchanger is constructed following the recommended design. In particular, it would be beneficial to also perform a heat flow versus cost analysis of prototypes manufactured with different materials, namely aluminum and copper, to compare with heat exchangers manufactured with identical materials but following the original design. It was a great opportunity to provide assistance on this project, and If any assistance is needed in developing future designs, or there are any questions regarding the results and recommendations of this memorandum, please contact any member of the design team at any time at:

mas6982@psu.edu - Matthew Schoffelmeer

crt5198@psu.edu - Chase Thatcher

ecl5165@psu.edu - Edward Li

cgm5201@psu.edu - Charles Marron

References

(I) Lockheed Martin Design Project Statement of Work (Version 2)

(II) Lockheed Martin PSU Project Kickoff Presentation (3/14/16)

Attachments

TABLE 1
NOTATIONS

Variable	Description
c_p	specific heat at constant pressure
k	thermal conductivity
p	pressure
q_V	volumetric heat source
T	temperature
t	time
u	velocity component in x-direction
v	velocity component in y-direction
w	velocity component in z-direction
ρ	density
η	dynamic viscosity

TABLE 2
Thermal Conductivity and Heat Capacity

Material	Thermal Conductivity (W/mK)	Heat capacity (J/cm^3K)
Silver	428	2.50
Copper	390	3.43
Aluminium	236	2.55
Stainless steel	24	3.93
Alumina	25	2.71
Beryllia	250	approx. 3
Aluminium nitride	170	approx. 3

Source:

http://www.bnwpix.com/thermal-conductivity-chart/dGhlcm1hbC1jb25kdWN0aXZpdHktY2hhcnQ/

TABLE 3

Current Metal Commodity Prices

Commodity price sensitivities

	2015 Base	2016 Base	2017 Base	Stress Case
Gold ($/oz)	$1,150	$1,150	$1,150	$1,000
High quality met coal ($/tonne)	$100	$95	$105	$80
Newcaste thermal coal ($/tonne)	$62	$60	$60	$55
Aluminum ($/lb)	$0.75	$0.75	$0.80	$0.65
Copper ($/lb)	$2.50	$2.35	$2.60	$2.20
Nickel ($/lb)	$5.25	$4.80	$5.25	$4.40
Iron ore 62% Fe China ($/tonne)	$50	$45	$45	$40
Zinc ($/lb)	$0.85	$0.80	$0.90	$0.75

Source: http://www.mining.com/wp-content/uploads/2015/10/moody-commodity-price-sensitivity.jpg

Figure 1. Conceptual diagram of a fin based heat exchanger with single sided propagation

Source: http://www.altasimtechnologies.com/wp-content/uploads/2016/01/MSFig2Pt2.jpg

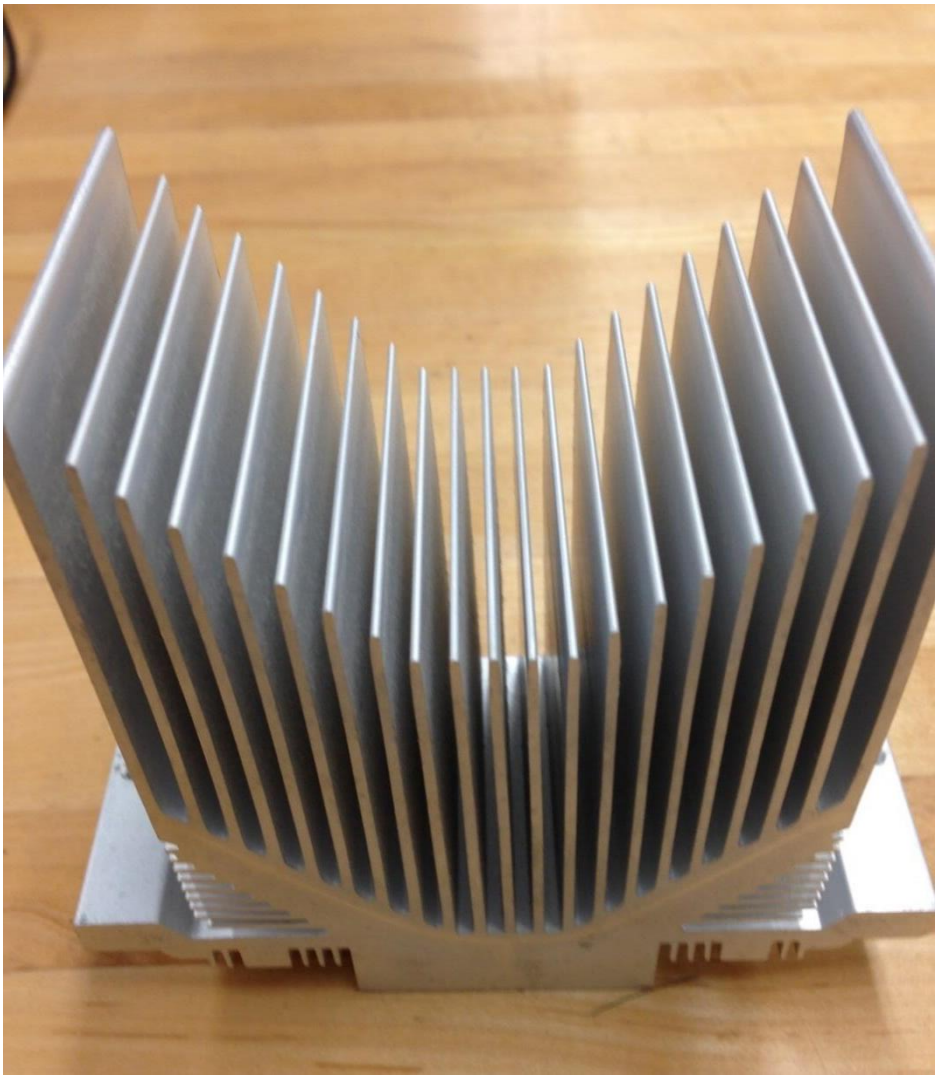

Figure 2. Typical heat exchanger

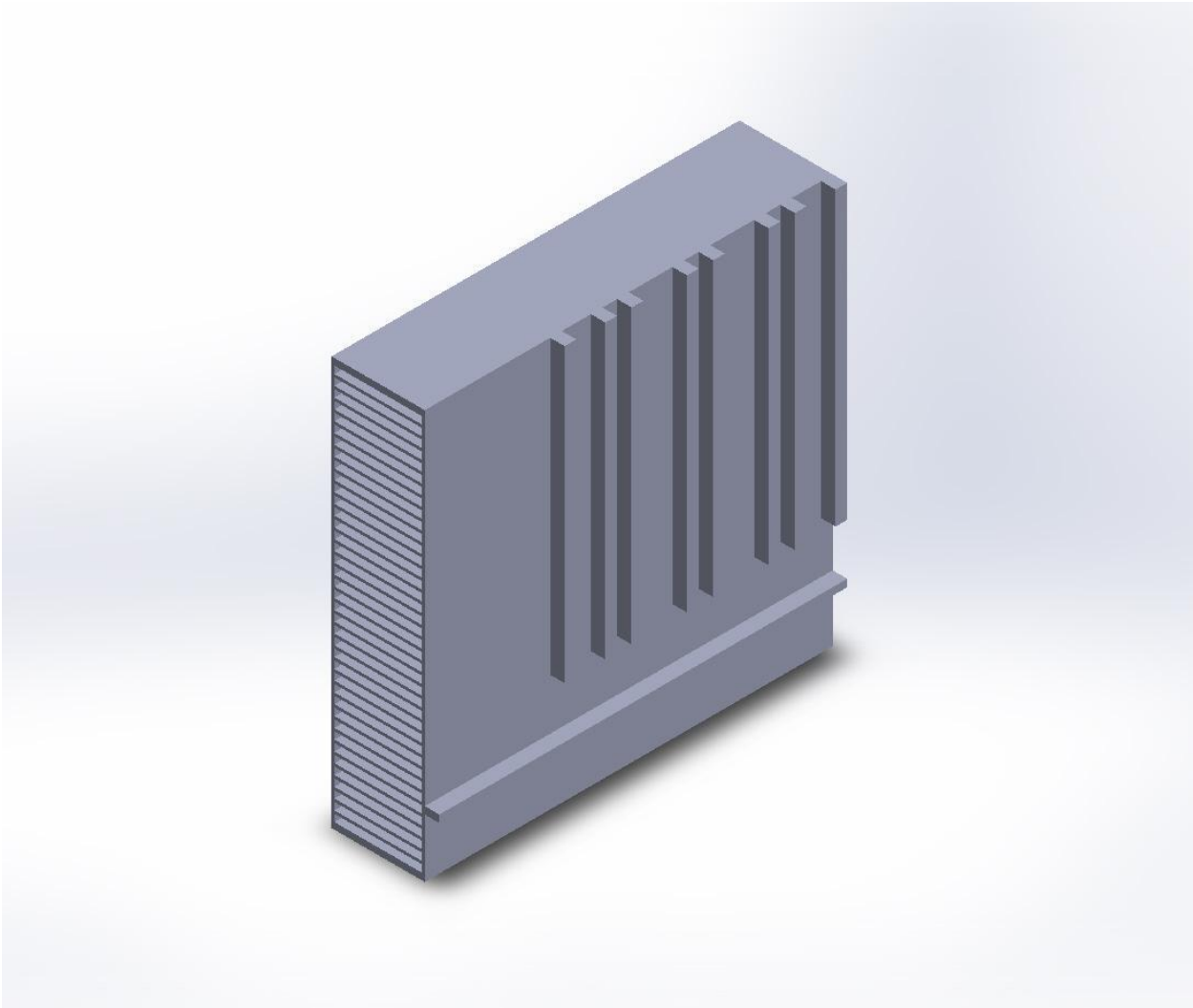

Figure 3. Original heat exchanger

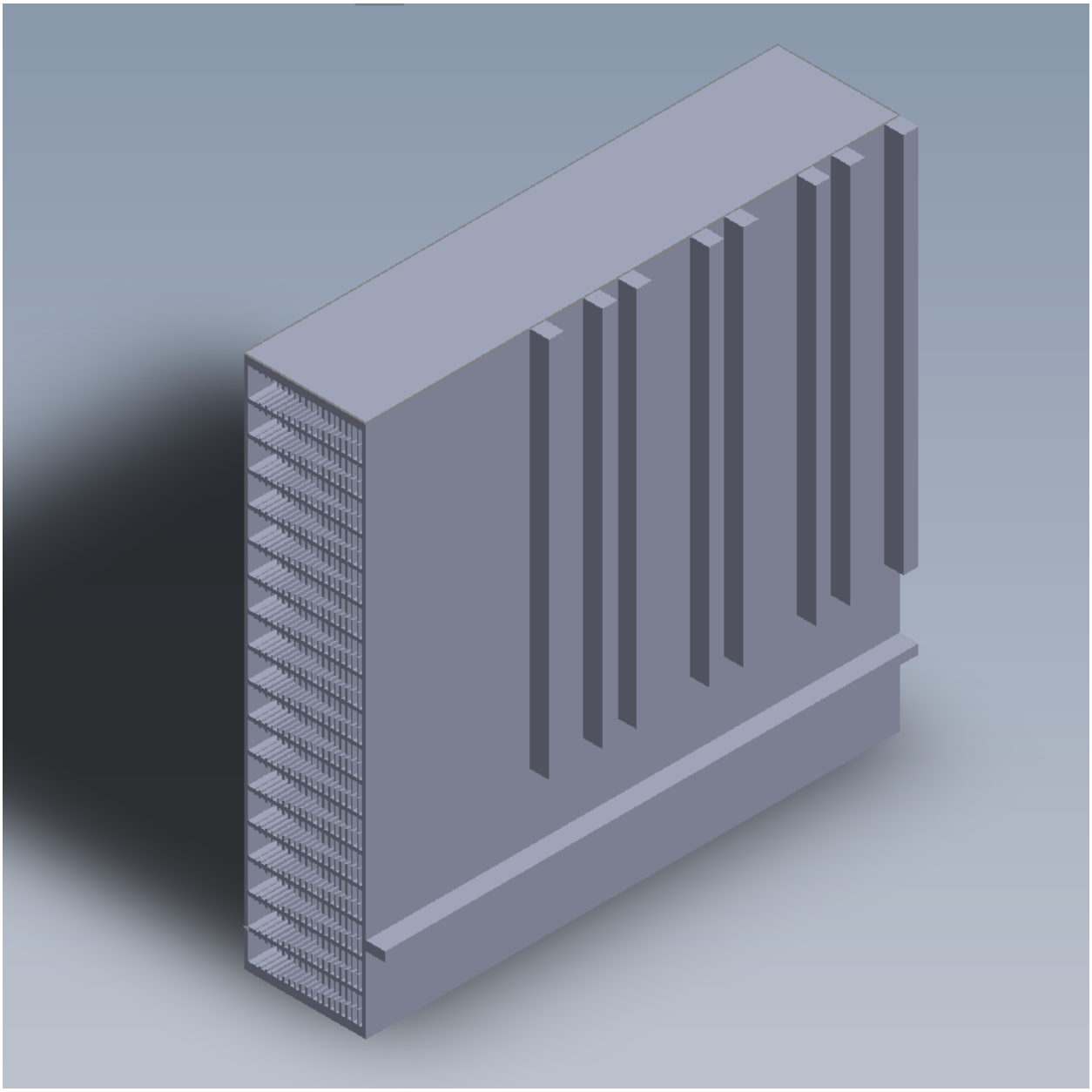

Figure 4a. Modified heat exchanger to improve efficiency

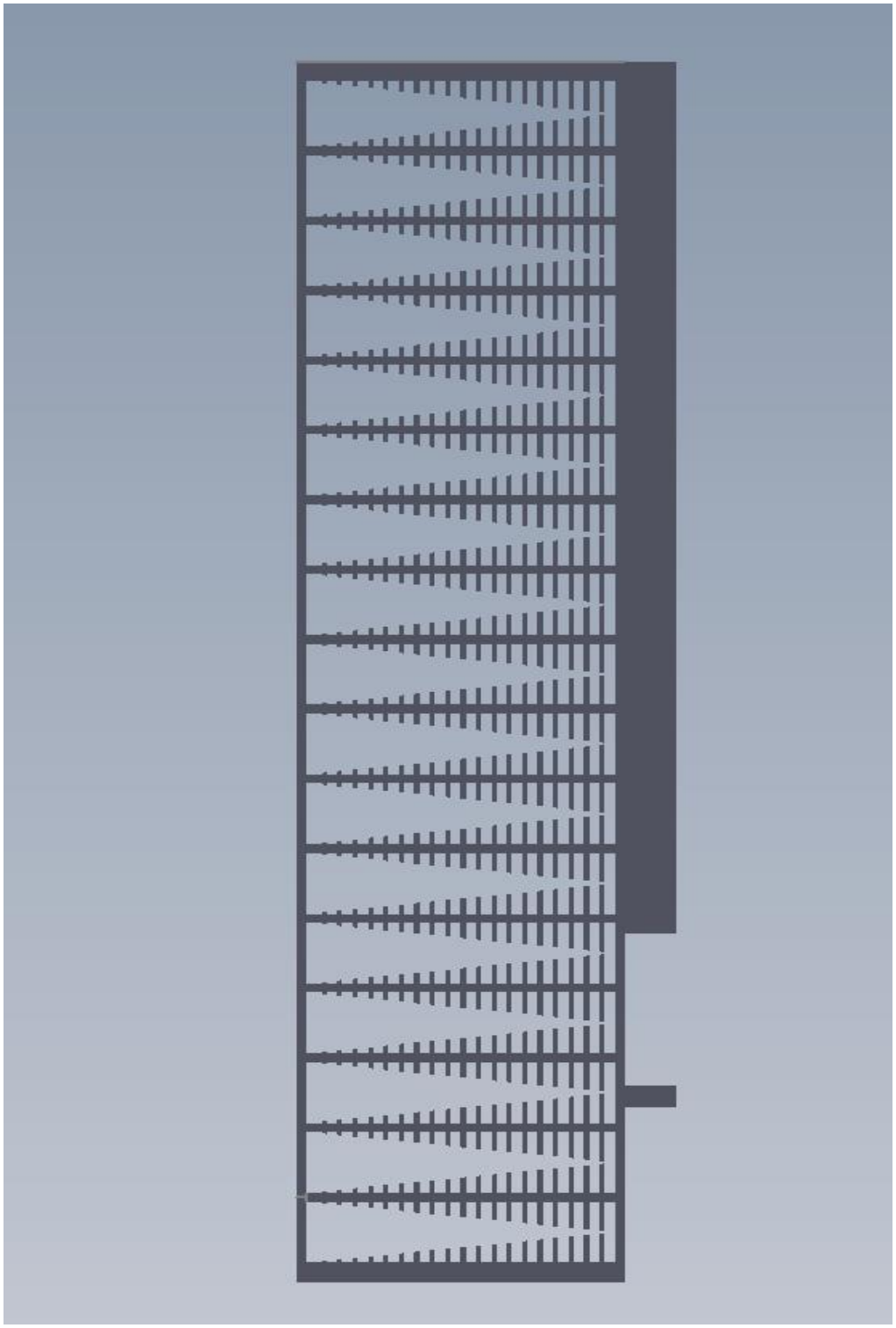

Figure 4b. Modified heat exchanger to improve efficiency