2011

Project 2 (Lazer Eyes)

Sponsored by Xerox

Michael (Mickey) Jaffee, Michael Guagliardi, Corey Punko, Emre Acar E-Design 100, Professor Correll

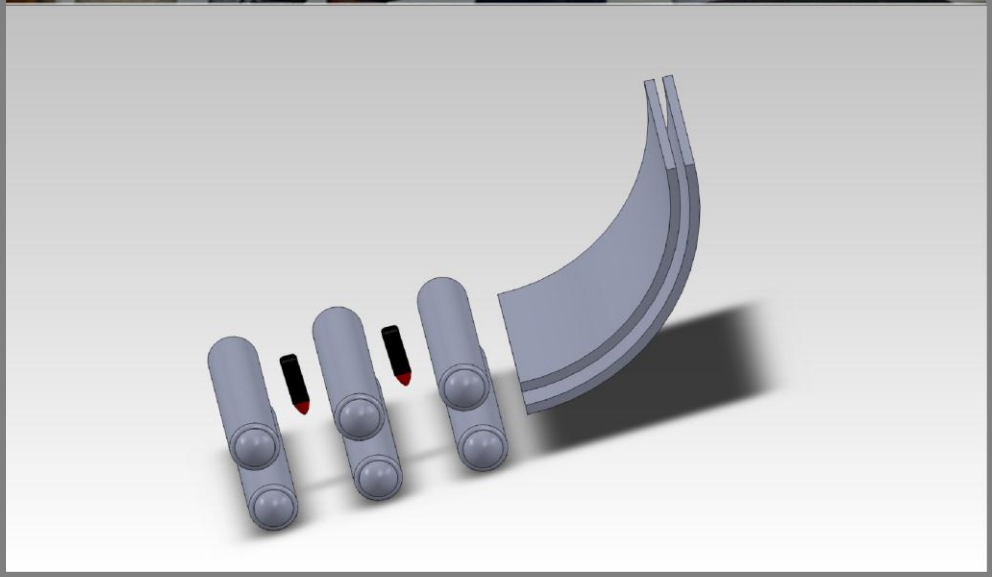

Abstract

The design process is a quality method for determining what a problem is, what ideas we can use as solution and creating a well-established design to solve a problem based on the customer's needs. In some cases this requires steps of constructing multiple prototypes and testing different theories, but in this project that is not needed. The project from Xerox was to come up with solutions that would solve one of their three problems. These problems were finding the velocity of paper along the path, finding a way to determine the stiffness of the paper as it moves along the path and finding a way to control the stacking of the paper as it comes out of the system.

When the project was first assigned each team was to determine which problem they wanted to solve. Our group made the determination that the velocity of paper would be our first option, followed by the stiffness and finally stacking. We made this determination because the path as a whole was already laid out and would only require the installation of the part we would later come up with. The idea not to do stacking was because the paper was basically coming out of the system in trays and it would require an entirely new system in order to finalize the process.

After determining that velocity was what we wanted to do, we came up with eight theories to solve or fix the problem. After using methods of the concept selection, we came up with our final idea to use lidar as the best design for calculating the velocity. We determined versatility, durability and accuracy were the most important customer need factors. We constructed our model on both a physical and CAD scale version. With this together we created our presentation and drafted this report as the final part of this project.

Problem Statement

As part of the EDSGN class, each year a company assigns a problem for students to solve. By doing so it helps both the sides by giving the company a plentiful amount of ways to solve their problems as well as give students a way of using the concept generation skills to solve the problem. This year we were lucky enough to have a well-established and thriving company as Xerox come to Penn State to give the class their problem. In this case however Xerox gave the students an option to solve one of three different problems so that they get a range of ideas in all fields.

The first option was to create a design that could calculate the velocity of the paper as it moved along the paper path. The second was creating a design that could measure the stiffness of paper as it moves along the paper path. The third was the option of creating a design that could control the stacking of paper as it comes out of the system.

We decided that the first option was the one we wanted to solve because it gave us the ability to add an element rather than creating an entire new system on our own. Also, when we first started brainstorming our ideas for this option, we came up with the best quality and quantity of theories. We concluded that the stacking of paper would be a last choice because of the need to add an entire new system but also would require more moving parts, as this could be more expensive and less durable over time. The stiffness also was not a good option because our group couldn’t create as many quality ways of solving this problem.

With our problem chosen, we now moved on to the next section of the design process, Concept Generation.

Concept Generation

Mechanical Functions- Ways to control the velocity of the paper as it moves through the system.

1. Controlled Roller Speed- With a new design of roller instead of just keep the paper on the path the controlled roller will accelerate the paper to a specific speed so it keeps everything constant.

2. Fishing pole/ Connection Method- A line or device will hook onto the paper and pull it through the system at a specific speed. This keeps every paper controlled under one designed path and speed.

3. Conveyor Belt Design- The paper lands on a conveyor belt that moves the paper along a path at a specific speed and will reduce the amount of need to check the stiffness of the paper.

4. Air Propulsion- Device that shoots the paper at a specific speed through the designed path.

Calculating Functions- Ways to calculate the speed so that it can be precisely measured and keep the systems moving at a certain rate.

1. Lidar- A laser shooting device that sends out and gets the information of the speed of a certain object in milliseconds. Allows system to know specific speed to run at and speed up or down.

2. Light Timing Gun- A device much like radar, it sends a flow of light and based on its reflection time calculates the speed the object is moving. This gives information to system within seconds.

3. Sensor Reference Point- Two sensors that calculate the speed of an object based on the timings between the two points of reference. Gives accurate speed calculations but takes a little longer than a second for paper to move past before the system knows to alter the speed.

4. Accelerometer- device that calculates the speed based on how fast the device is moving and can send a signal to system. Needs to connect to first paper to know the speed and get a result.

The connection of a calculating function and mechanical function allows the system to send paper at a specific speed and allows adjustments if needed throughout the system.

Developing concepts is the process of getting every possible idea of solving the problem out there in order to begin finding the best design. Some ideas in the concept generation may not be most efficient ways of solving the problems but in this part of the design process you are supposed to open the funnel of ideas as wide as it can get. Once you have these concepts generated, you continue to follow the process into the next stage, customer needs and AHP weighting scale.

Customer Needs and AHP Weighting

Customer needs is the next part of the design process where you break down the problem statement in order to decide which part of the design you are creating for is the most important. You calculate to find which need is most important by using an AHP chart which gives each customer need a rating and a weight.

Selection Criteria	Accuracy/Precsion	Ease of Implimentation	Efficiency	Ease of Use	Durability	**Total**	**Weight**
Accuracy/Precsion	1	4	2	2	1	10	0.29
Ease of Implimentation	0.25	1	0.5	0.5	0.25	2.5	0.07
Efficiency	0.5	2	1	1	0.5	6	0.17
Ease of Use	0.5	2	1	1	0.5	6	0.17
Durability	1	4	2	2	1	10	0.29
						34.5	0.99

By doing this you can cancel down some of the concepts generated by using the weights of the customer needs. If a concept doesn’t have a good rating compared to the others or to customer needs you can cancel it out and let the better ones who have better numbers move on to the next step in the design process, which takes you to Concept Scoring and Concept Screening.

Concept Screening and Selection

Concept Screening is the process in which you compare all the ideas within the concept generation to the current or reference theory. Since in this case we currently don't have a function that calculates the velocity of paper along the paper path, our group used one of the theories as reference and compared the others to that to get the positive or negative values of each. As shown below each can receive a positive, negative or same rating which helps calculate whether the theory moves on to concept election.

Selection Criteria	**A**	**B**	**C**	**D**	**E**	**F**	**G**	**H**	**REF A**
Accuracy/Precsion	P	P	P	0	P	P	P	P	0
Ease of Implimentatior	P	M	M	P	P	0	P	M	0
Efficiency	0	0	M	0	P	P	P	M	0
Ease of Use	P	0	0	M	P	M	0	M	0
Durability	M	0	P	M	0	P	0	0	0
Pluses	3	1	2	1	4	3	3	1	
Sames	1	3	1	2	1	1	2	1	
Minuses	1	1	2	2	0	1	0	3	
Net	2	0	0	-1	4	2	3	-2	
Rank	3	4	4	5	1	3	2	6	
Continue	Y	N	Y	N	Y	N	Y	N	

Using concept A as the reference we were able to eliminate down to half the previous amount of theories and see what ideas currently have the highest rating.

Concept Selection is the process of comparing the concepts which moved on from the concept selection and the values of the AHP chart to find the best theory to go with in the design process and creation. In the selection chart you multiply the rating of each concept times the weight of the customer need.

		A REF		C		E		G	
Selection Criteria	**Weight**	Rating	Weighted Score	Rating	Weighted Score	Rating	Weighted Score	Rating	Weghted Score
Accuracy/Precsion	0.29	1	0.29	2	0.58	4	1.16	3	0.87
Ease of Implimentation	0.07	4	0.28	1	0.07	2	0.14	3	0.21
Efficiency	0.17	2	0.34	4	0.68	3	0.51	1	0.17
Ease of Use	0.17	4	0.68	2	0.34	1	0.17	3	0.51
Durability	0.29	1	0.29	4	1.16	3	0.87	2	0.58
	Total		1.88		2.83		2.85		2.34
	Rank		4		2		1		3
	Combination		N/A		Combine with E		Combine with C		N/A
	Continue		No		Yes		Yes		No

Going by the concept selection, the values show that concept C and concept E were the two best methods. However, in deciding which to use, our group concluded that combing these two would be the best all-around design. With finding the concept that we are going to use, we move along the design process and go to our design portion. The reason the lidar made it through the selection process was mainly due to its accuracy/ precision and its durability. Once implemented and programed the lidar should work for the entire lifetime of the printer with little adjustment needed.

Our Design

The theory that we chose to use, consists of two lidar pieces stationed between the top rollers pointed down toward the paper path. The conveyor belt, which is an extra addition, replaces the bottom rollers so that the lidar is shooting on one point and the conveyor belt can be altered to adjust the speed as need be by calculation of the lidar. As shown below adding the lidar is a simple feature that cost less than $100 build and is less than two inches in size. The model is shown best in the computerized version below but doesn't include the belt since it's an extra feature. With the lidar in place, it will give a constant flow of results within seconds of happening. Since the path is already designed, implementation should be an easy change and can improve the iGen4 greatly over its lifetime.

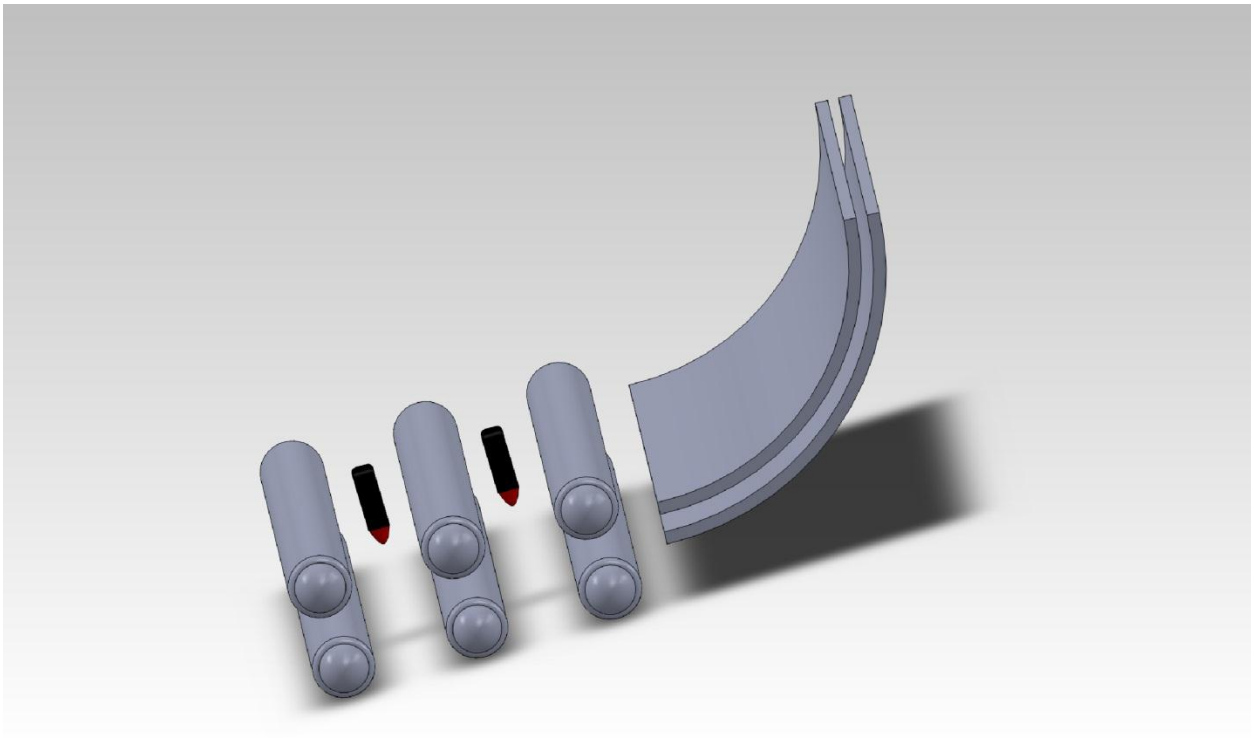

Scaled in Inches

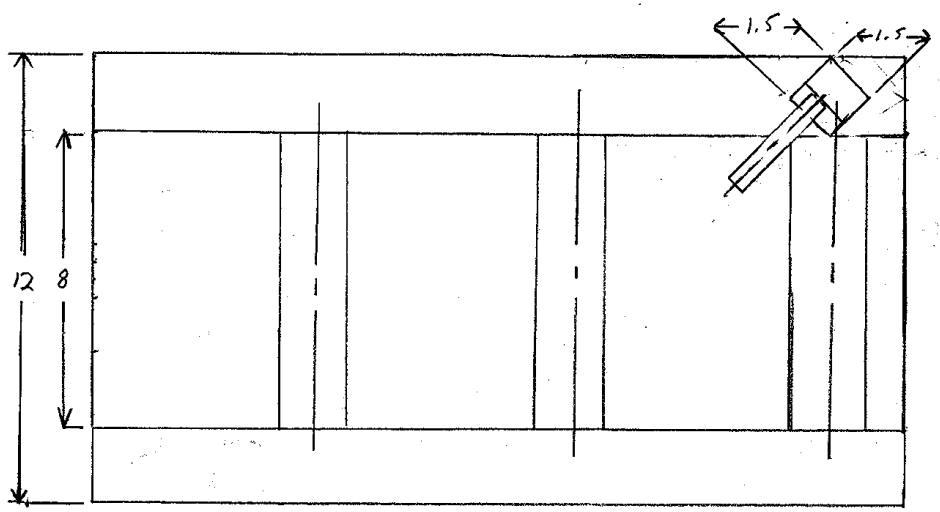

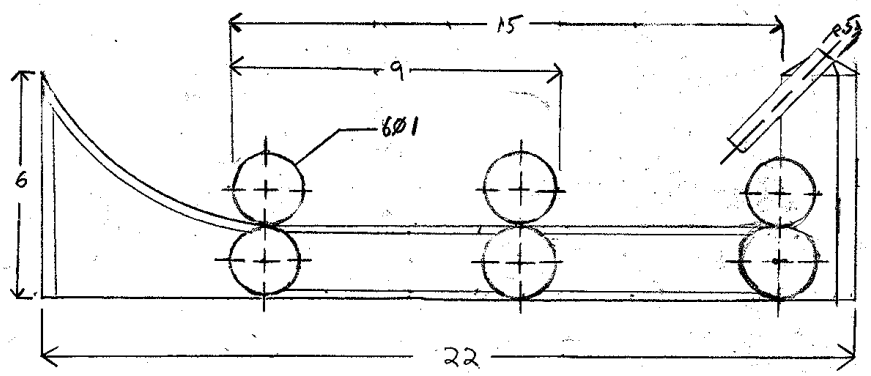

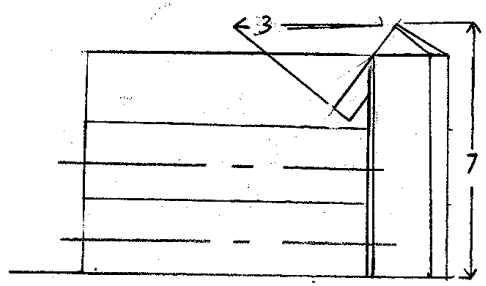

Testing and Adjustments

Since this project didn't dictate that there had to be a working model, there is no way to do testing and make adjustments. With this you assume that everything you designed works properly and efficiently. After you have construct everything that goes with the design process you move on the last steps in conclusion and lessons learned.

Lessons Learned and Conclusion

During the process of this report, we learned that the first concepts that you come up with will most likely not be included in your final report because as you go other concepts may have key factors that put it above the rest. If possible, sometimes you can make a combination or hybrid of multiple concepts to get a better method. Also, by seeing what other groups constructed and did for their project we decided we should have stuck to having lidar as more of a focal point and the belt as a secondary rather than presenting both equally. Since there was a lack of testing and reconstruction it's hard to determine what you could have improved on your model. The use of CAD/ Solidworks helped layout the model, which made constructing the physical easier and more universal. For the future, solving the problem takes effort from every member and working as a team is the key of the process, even though our group was probably one of the best, team unity is very important and all being on the same page helps the presentation. Xerox was a great company to work with during this project and made questions easily answered and gave an awesome opening presentation which was not too long or too short. By going through the design process this wraps up the report until further information is gathered or implemented.