Dual Brush Action Pro

Team 7: R_2B_2

Engineering Design 100, Section 001
Submitted to John Klinger, March 6, 2009

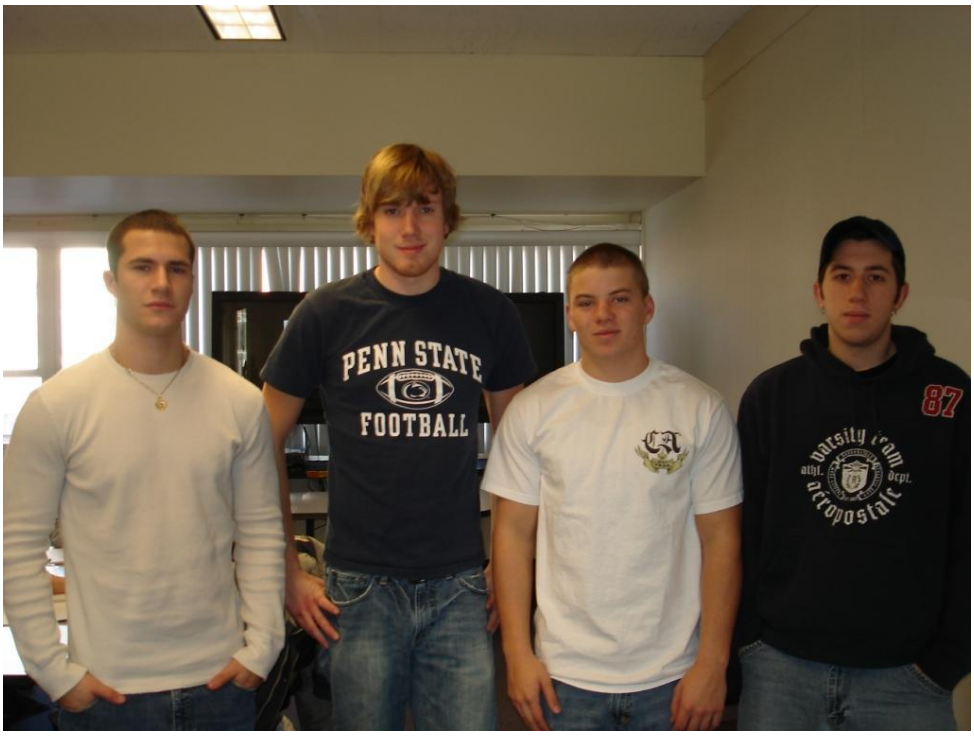

(From left to right)
Brendan Murray, bxm5054@psu.edu
Ben Myers, bdm5066@psu.edu
Ross Quillet, rcq102@psu.edu
Robert Seaman, rms5265@psu.edu

1.0 Abstract

The problem set before us was to design an electric toothbrush that performed better than current products available on the market today. We began with studying a current electric toothbrush, analyzing its strengths and weaknesses. Among the weaknesses we found were a lack an awkward on/off switch and disposable batteries. Seeing these as our goal, we began our design process with this in mind. Our concept selection included solutions for them but also provided a varied group of characteristics that would make a superior electric toothbrush. After settling on three designs, we then tested their qualities against the original and current model. All three surpass this one but one clearly shined above the rest. It was this design which included the improvements needed in the original, added features for providing a clean mouth, and ergonomic additions to support the most comfort when brushing.

Table of Contents

2.0 Introduction
3.0 Problem Statement
4.0 Customer Needs Analysis
5.0 External Research
  5.1 Literature and Patent Search
  5.2 Product Dissection
  5.3 Benchmarking
6.0 Target Specification
7.0 Concept Generation
8.0 Concept Selection
9.0 Final Specification
10.0 Embodiment Design and Final Design Description
11.0 Conclusions
12.0 References

2.0 Introduction

The electric toothbrush is a fairly modern advancement in personal dental care. Development of new and innovative electric toothbrushes is occurring constantly through the application of known dental science and current technologies. Our product is one such innovation, utilizing ever smaller technology to provide a powerful cleaning tool to protect teeth. This design came as a result of the hard work of our engineering department who began with researching the pros and cons of older designs while also using a little ingenuity to create this brand new product. The necessary specifications came from consumer interviews and research, allowing us to design around their needs alone. The specifications were then narrowed down in order to provide the most functional product to our customers. Top

3.0 Problem Statement

The current Oral B Cross Action toothbrush is a solid electric toothbrush, designed to work for anyone with all their adult teeth and without any severe tooth decay. However, it is still limited in its ability to remove plaque and to effectively clean not just teeth, but the gums and tongue. Top

4.0 Customer Needs Analysis

The customer needs were determined through eight interviews consisting of ten questions; these responses were organized into need statements and ranked as far as level of importance. These results, as can be seen below, show that the most important needs of the customers are that the toothbrush cleans well, batteries are included, that it is relatively inexpensive, and that it has a long battery life. Top

Table 1

No.		Need	Imp
1	The toothbrush	costs between $5-$15	4
2	The toothbrush	the noise is limited	3
3	The toothbrush	the battery has a moderate to long life	4
4	The toothbrush	uses a rechargeable battery	4
5	The toothbrush	has batteries that are included	5
6	The toothbrush	comes in an aesthetically pleasing and easy to open case.	3
7	The toothbrush	is a moderate size	3
8	The toothbrush	comes in two colors	1
9	The toothbrush	has a comfortable grip	3
10	The toothbrush	the toothbrush cleans well	5

5.0 External Research

5.1 Literature and Patent Search

Through our research we found many useful tools in understanding how to provide a better product. The first was the price which we found varied from $5.49 on eBay to $12.34 on SHOP.com. The product has been on the market since 2003 with the patent (Patent Number 6308367) being filed on Oct. 23, 1998 and being issued on Oct. 30, 2001. Top

5.2 Product Dissection

Any feature that could be removed without permanently damaging the electric toothbrush was taken off first. These items were taken off one at a time, and then organized into the table below with their corresponding masses, functions, dimensions, and whether or not the brush functions when this part is removed. Once this was taken care of, the part itself was researched as to determine its manufacturing process, cost, and material. The manufacturing processes of each of these parts consisted primarily of injection molding, extrusion, and wire form. Similarly, the irremovable parts were carefully taken off and categorized in a similar manner. Pictures of these parts can be seen on following the below table entitled Bill of Materials.

Some of the things we observed when dissecting the toothbrush were that the toothbrush supplied motion to the two brush heads by a motor connected to a metal rod that vibrates in between the plastic of the two heads causing them to move in a predetermined motion by the structure of the body of the toothbrush. Also the single battery was attached to two pieces of metal that ran to the motor to conduct the electricity and after disassembling the toothbrush the battery could be placed either forward or backward and still power the motor. For the most part, the dissection process was pretty simple. Most of the parts were plastic and detachable by using a little bit of force except for the motor and brush head. The motor had to have some of the metal wire that was connected to the battery cut out and the brush head required to pins to be removed, which was pretty difficult. The materials were almost all plastic except for the motor, battery, grip and other small miscellaneous parts, which were expected. Finally, the noise of the toothbrush and battery life was calculated. We calculated the overall noise of the toothbrush using a decibel meter and we determined the battery life by using a device that tested for battery life. Top

5.3 Benchmarking

Most of the selection criteria used came from or was inspired by the needs statements as well as the investigation of other tooth brushes. The weighting obviously came from how highly each component was valued to customers. In this case, the rating was used to evaluate a score for each category. These Scores were totaled, with a maximum score of five, for each of the three brushes, and these scores were compared. The Kids Crest Spin brush ended up with the highest score whereas the Oral-B Cross Action was second. Therefore, aspects of the Crest Spin Brush need to be taken into account notably, cost, quietness, battery life, and variety of colors. Even though the Cross Action ranked above two of the competitor brushes, it still had weaknesses in categories that others didn't such as ease of opening and weight. The Rating Scale used can be seen below the chart (Table 2). Top

Table 2

Selection Criteria	Weight	Oral-B CrossAction			Crest Spin Brush ProClean			Gum Crayola			Kids Crest Spin Brush		
		Rating	Value	Score	Rating	Value	Score	Rating	Value	Score	Rating	Value	Score
Inexpensive	17%	4	$7	0.68	3	$8	0.51	5	$6	0.85	5	$6	0.85
Quietness	13%	3	80.1 db	0.39	2	82 db	0.26	5	67.5 db	0.65	4	75 db	0.52
Battery life	17%	3	8.2 h	0.51	2	6.25 h	0.34	1	3.8 h	0.17	5	30.99 h	0.85
Ease of opening	5%	5	20 sec	0.25	4	30 sec	0.2	4	30 sec	0.2	3	40 sec	0.15
Moderate weight	5%	5	70.5 g	0.25	2	118.4 g	0.1	3	109.8 g	0.15	4	93.8 g	0.2
Color variety	5%	4	2	0.2	4	2	0.2	5	3	0.25	5	3	0.25
Comfortable grip	13%	5	5	0.65	4	4	0.52	2	2	0.26	2	2	0.26
Cleaning ability	25%	5	5	1.25	5	5	1.25	3	3	0.75	4	4	1
Total	**100%**												
	Total Score	3.5			3.38			3.28			4.08		
	Rank	2			3			4			1		

Rating	
Much worse than reference	1
Worse than reference	2
Same as reference	3
Better than reference	4
Much better than reference	5

6.0 Target Specification

Below are the target specifications for the Oral B Cross Action Plus. Based on customer needs and benchmarking, the most important aspect of the toothbrush was to be its ability to clean well, and as a result this was the only metric that was rated at an importance of 5. Cost and battery life were also of reasonable importance. Units were straightforward, except perhaps when they were subjective which was in the case of a comfortable grip and the ability to clean well. Top

Table 3

Metric No.	Need No.	Metric	Imp	Units	Marginal Value	Ideal Value
1	1	Is relatively inexpensive	4	$	<8	<6
2	2	Utilize a decibel meter	3	Decibels	<80	<65
3	3	Utilize a battery length tester	4	Hours	>7	>10
4	6	Measure time it takes to open packaging	3	Sec	<40	<20
5	7	Is a moderate size	3	Grams	<100	<80
6	9	Comfortable grip	3	Subjective	>3	>4
7	10	Cleans well	5	Subjective	>4	>5

7.0 Concept Generation

Table 4

Stored Energy	Brush Head	Ergonomics	Other Features
Battery	2 Rotating Heads	Removable Left/Right handed grip	Replaceable heads
Rechargeable Battery	2 Oscillating Square Head	Single, on off button	Multiple Bristle Strengths (Soft, Strong)
Power Cord	1 Oscillating Square Head 1 Rotating Head	Larger Grip (covers battery section)	Multiple Motor Levels (Low, Medium, High)
Solar	Rubber Bristles	Moldable Grip (one time heated)	Multiple Brush Motions
Pull String	Tongue Scraper	Quiet Motor	Included Brush Cleaning Chamber

1: Rechargeable battery, 2 Rotating Heads with Tongue Scraper on back, Moldable Grip, Replaceable heads

2: Power Cord, 2 Oscillating Square heads, single on off button, removable left/right grip, Included Brush Cleaning Chamber

3: Rechargeable Battery, 1 Oscillating Square Head and 1 Rotating Head with Tongue Scraper, Moldable Grip, Single on/off button, Quiet Motor, Multiple Motor Levels

4: Solar, 1 Oscillating Square Head and 1 Rotating Head with tongue scraper, Large grip, multiple motor levels

5: Battery, 1 Oscillating Square Head and 1 Rotating Head, Rubber Bristles, Quiet Motor, Multiple Bristle Strengths

6: Rechargeable Battery, 2 Rotating Heads with tongue scraping, Removable Left/Right handed grip, Multiple Motor Levels

Top

8.0 Concept Selection

For our concept selection, we began with a screening matrix where we compared all of the attributes of our designs. Finding which presented the most potential we then used our benchmarking table (Table 2) to compare our concepts with the Oral-B CrossAction. Top

Table 5

	Concept Variants					
Selection Criteria	1	2	3	4	5	6
Inexpensive	0	-	-	+	-	-
Quietness	0	0	+	0	+	0
Battery life	+	+	+	+	0	+
Ease of opening	0	0	0	0	0	0
Moderate weight	-	-	-	-	0	-
Color variety	0	0	0	0	0	0
Comfortable grip	+	+	+	-	0	+
Cleaning ability	0	-	+	0	+	+
PLUSES	2	2	4	2	2	3
SAMES	5	3	2	4	5	3
MINUSES	1	3	2	2	1	2
NET	1	-1	2	0	1	1
RANK	4	6	1	5	3	2
CONTINUE?	no	no	yes	no	yes	yes

Table 6

Selection Criteria	Weight	Oral-B CrossAction			Concept 3			Concept 5			Concept 6		
		Rating	Value	Score	Rating	Value	Score	Rating	Value	Score	Rating	Value	Score
Inexpensive	17%	5	$7	0.85	4	$8	0.68	3	$9	0.51	3	$9	0.51
Quietness	13%	3	80.1 db	0.39	5	70 db	0.65	4	75 db	0.52	3	80 db	0.39
Battery life	17%	3	8.2 h	0.51	4	600 h	0.68	3	8 h	0.51	5	N/A	0.85
Ease of opening	5%	5	20 sec	0.25	5	20 sec	0.25	5	20 sec	0.25	5	20 sec	0.25
Moderate weight	5%	5	70.5 g	0.25	4	75 g	0.2	5	70 g	0.25	3	80 g	0.15
Color variety	5%	5	2	0.25	5	2	0.25	5	2	0.25	5	2	0.25
Comfortable grip	13%	4	4	0.52	5	5	0.65	5	5	0.65	5	5	0.65
Cleaning ability	25%	4	4	1	5	5	1.25	5	5	1.25	5	5	1.25
Total	**100%**												
	Total Score	3.17			4.61			4.19			4.3		
	Rank	4			1			3			2		

9.0 Final Specification

Table 7

Feature	Current Specs	New Specs
Cost	$7.00	<$10.00
Quietness	80.1 db	70 db
Battery life	8.2 h	6 (x 100 recharges) h
Ease of opening	20 sec	20 sec
Moderate weight	70.5 g	75 g
Color variety	2	3
Comfortable grip	4	5
Cleaning ability	4	5

We utilized our original customer needs for our final specifications. When we had selected our final concept, we found it to be comparably better than the original and continued with the former needs and benchmarking methods that were used in this table. Top

10.0 Embodiment Design and Final Design Description

The final design was aimed primarily to address the customers' demands that the brush be able t o clean well. The previous brush design, a single rotating circular head and an oscillating square head, was used with this final design mostly because the two different motions provide an excellent means of plaque removal that really didn't need to be improved upon. However, to account for sensitive teeth as well as difficult to remove plaque, the final brush came equipped with multiple brush motor levels ranging from high to low. Again to add to the brush's ability to clean a mouth, a tongue scraper was added to the side opposite of the brush. Tongue brushing is recommended by dentists, but a tongue scraper is more comfortable and better suited to clean a tongue than a simple tooth brush head. Because battery life was a large concern for customers, the included battery was switched with a rechargeable battery to allow for extended use. The remaining top concerns, comfort and noise level, were addressed through a moldable grip and a quiet motor. The moldable grip was meant as an improvement over the previous rubber grip. Instead, this grip will compress slightly where held to make a slight mold around the user's hand to provide an added level of comfort as well as making the toothbrush easier to hold. The quiet motor consists of the previous motor surrounded by an insulation material to limit its noise level.

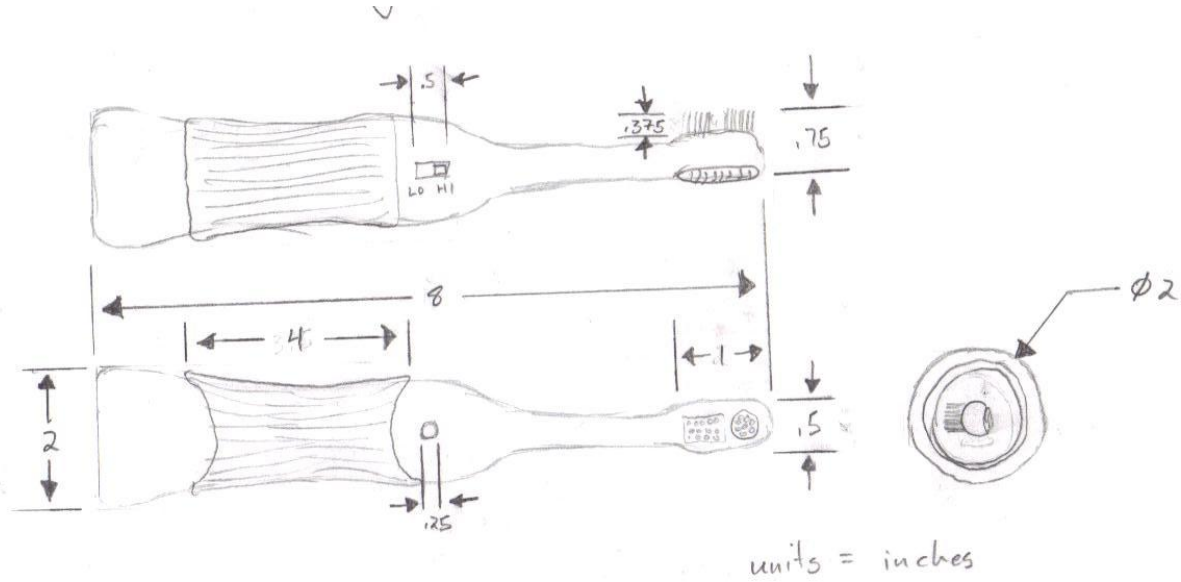
.5
.375
.75
LO HI
8
4
1
2
.5
.25
Ø2
units = inches

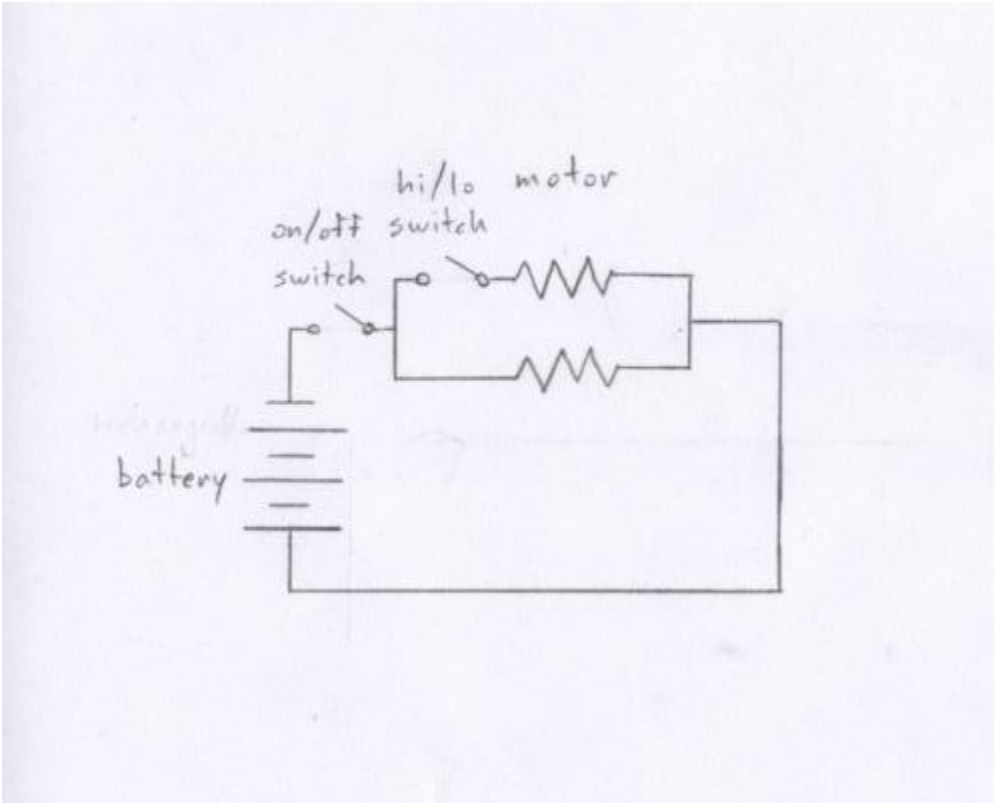
hi/lo motor
on/off switch
switch
battery

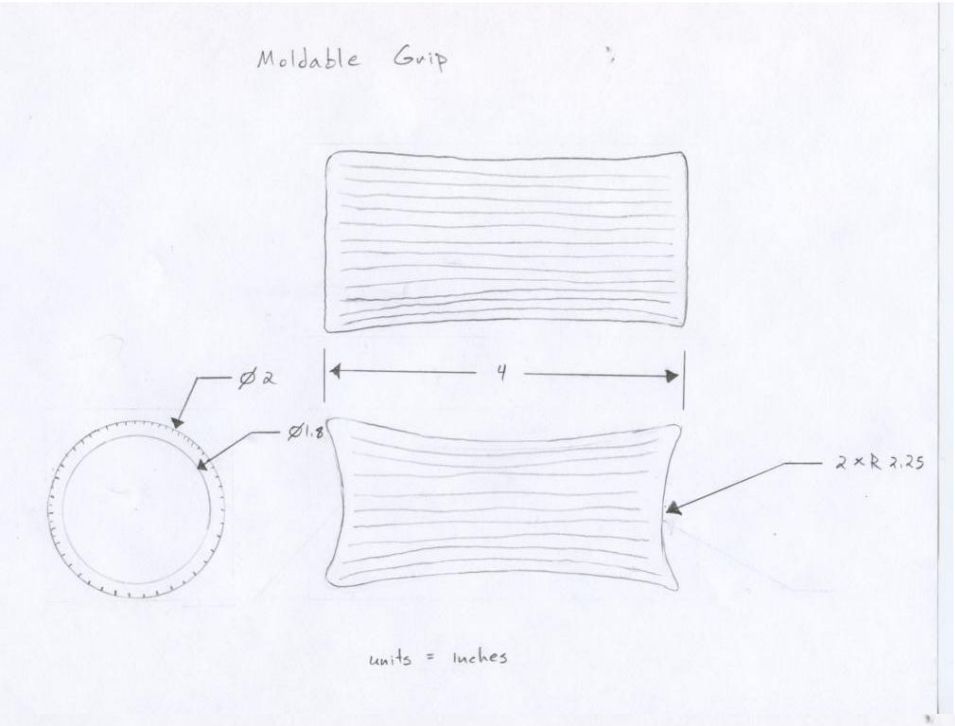

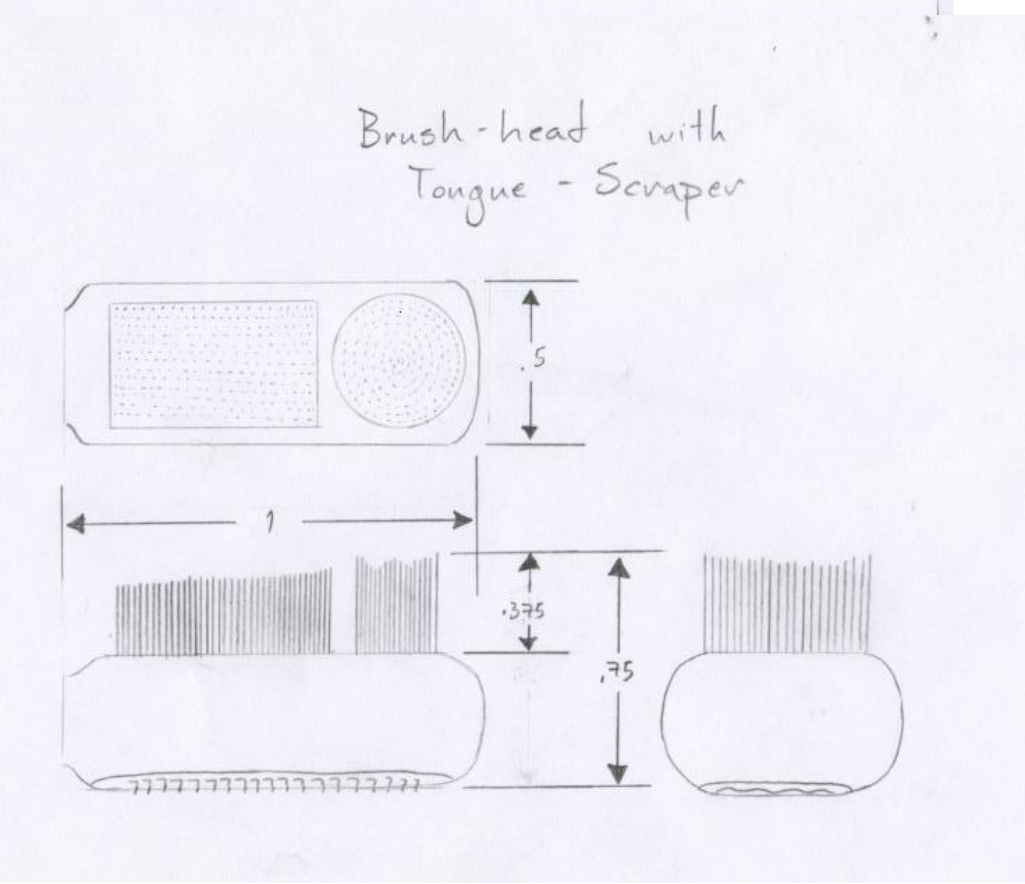

Obviously with all the improvements, this new product will prove more expensive than the original which was on average $7. The rechargeable battery would add approximately $.75

to the final price, whereas, the tongue scraper would likely cost slightly less than a brush head, or about $.50. The new grip and insulating material would together cost another $1. However, the addition of multiple motor strengths should not increase the new cost by much since the old design would simply need to be reconfigured to draw more current for the higher motor levels. Based on this information, the new toothbrush would be priced between $9 and $10. While this is an increase, based on those surveyed, cost was not a huge issue as many felt that $10-$15 was a reasonable price range for an electric toothbrush. Top

11.0 Conclusions

The design incorporates multiple motion heads, a square bristle head oscillating in a vertical motion and a round bristle head rotating in a circular motion. Among our other features, we understand the importance of a clean mouth; therefore in addition to effective teeth cleaning brush heads, the new product utilizes a tongue scraper to combat bad breath. From an ergonomic prospective, our design provides the utmost comfort for your mouth and your hands. The moldable grip allows the toothbrush to be held comfortably by any size hand and at the same time providing a slip-free hold. For sensitive teeth, our original design incorporates two different motor speeds to allow you to choose which is most comfortable for you. Another feature is the single on/off button conveniently placed where the thumb naturally rests on the grip, allowing you to operate the toothbrush with ease and comfort. These improved incorporations allow our design to perform better than previous competitive models. Top

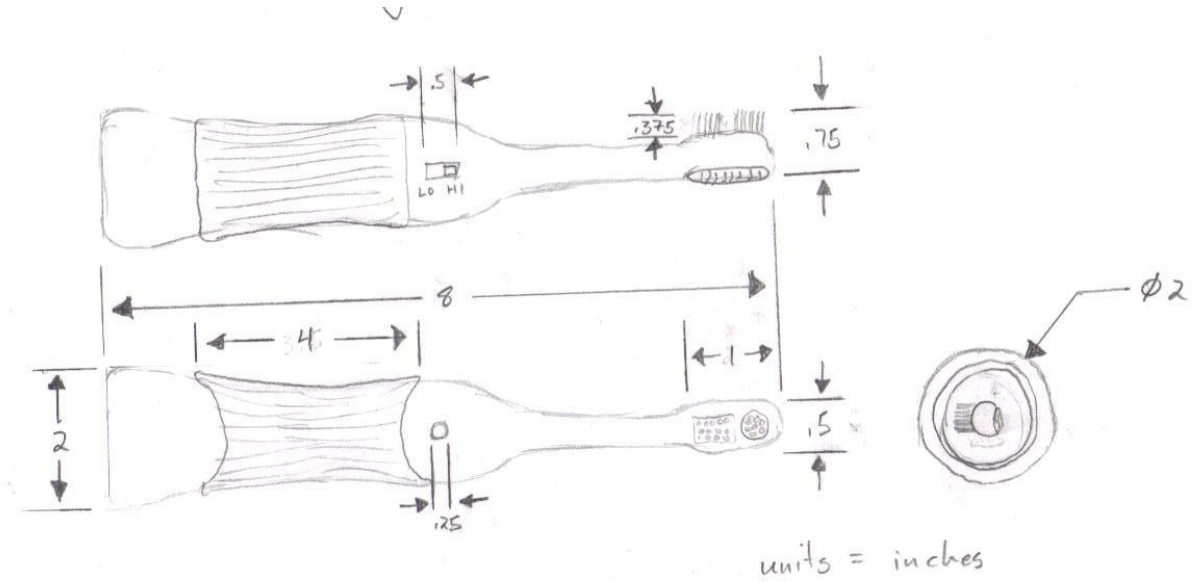

12.0 References

Bluejay, Michael. "Battery Guide: your guide to types of household batteries"

http://michaelbluejay.com/batteries/, viewed on February 22nd, 2009.

Neamen, Donald A., Microelectronics: Circuit Analysis and Design, 3rd edition, McGraw Hill, 2007.

Oral B. "Oral B Cross Action Power Toothbrush", http://www.oralb.com/en-US/products/default.aspx#f=0_0-1_1_0&overlay=capower&s=&rd=, viewed on February 19th 2009.

Google Patent Search. "Electric Toothbrushes." http://www.google.com/patents?id= ycIhAAAAEBAJ&dq= electric+toothbrush, viewed on February 20th 2009.

Duracel. "Products: AA Coppertop" http://www.duracell.com/products/coppertop.asp?id=34& viewed on February 15th 2009.

Top