PennState College of Engineering | ENGINEERING DESIGN, TECHNOLOGY, AND PROFESSIONAL PROGRAMS

Technical Memorandum
No. EDSGN100.001

Date: April 22, 2016

To: Lockheed Martin Corporation

From: EDSGN100 Section 001
Steel Corps
Nelson DiBiase
Isaiah Wright
Youseif Alotaibi
Bailey Frisco

Subject: Penn State University
EDSGN 100: Introduction to Engineering Design
Client-Driven Design Project, Spring 2016

Purpose. The purpose of this Memorandum is to explain the process in which our design team created a new, enhanced USB port bracket for the aerospace company Lockheed-Martin, and to present our product.

Background. Additive manufacturing is the process of creating objects from 3D model data by adding layer upon layer of material, rather than standard methods of subtractive manufacturing such as drilling, milling, grinding, etc. Each design team's objective was to redesign a product that is typically made by Lockheed-Martin so that it is more efficient, cost effective, or lighter. We designed our improved 3D models on the CAD program SolidWorks, and used the additive manufacturing process to create a prototype.

Sponsor. Our project sponsor is Lockheed-Martin. The company's headquarters are located in Bethesda, Maryland. Their main focuses are global security and aerospace engineering. They have approximately 126,000 employees worldwide, with over 590 facilities in the United States, along with locations in over 70 foreign nations and territories.

Project Description. For the project that our design team chose (as described in the Statement of Work), we were asked to redesign a USB Hub Mounting Bracket used as a debug and auxiliary mounting device for a custom avionics mission system. The company wanted the new bracket to provide greater capability for the avionics technician and also allow the USB Hub to be installed in various locations on the platform. Our primary goal was to reduce the total number of parts for the bracket and provide a vertical installation configuration. Our team chose this project out of the five different options because we left that we had the best understanding of what Lockheed-Martin was looking for, for this particular task.

Procedures. Before we could start to design our own USB bracket for Lockheed-Martin, we first had to examine the original bracket that the company was using (as shown in Figure 3). After evaluating the bracket's flaws and strengths, we were then able to establish the best possible modifications. Our first modification was to minimize the number of parts as much as possible. We decided that the bracket could be designed to have two matching pieces (Figure 2), where the top piece of the bracket will fit inside of the bottom piece so that the USB Hub was snug in between the two. After we established the basic design, we then tried to minimize the use of wasted materials, so we removed as much material as we could without weakening the bracket (Figure 1). After deciding on the final design, we constructed our USB Hub bracket on SolidWorks (Figure 4), and had a prototype 3D printed.

Results and Discussion. The final, altered design to the USB Hub bracket was constructed as a two piece apparatus that fit together to mold completely around the USB Hub to hold it secure (Figure 4). The bracket was made to minimize the material used in production as well as its total number of parts. These two modifications fulfilled the primary goals of the project. As well as completing the preceding tasks, our design also achieved other project goals including the option for vertical mounting and a large enough bracket to hold a 7-port USB Hub. Our modified design is advantageous because it fulfills all requirements for the project and is also efficient for Lockheed-Martin, due to the decrease in materials needed to produce the product.

Conclusions and Recommendations. To sum up, the result of our final, modified design fulfills all project requirements, and therefore is considered a successful product. As a whole, our design team is grateful for this opportunity to work on this project, and we would welcome an opportunity to be involved in any future projects. If any additional information is needed, please contact Bailey Frisco, by the following email bsf5117@psu.edu.

References. The references used for this Memorandum were the Statement of Work and the Lockheed-Martin Presentation discussed in the Project Kick Off Meeting on 14 March 2016.

Attachments. Figure Nos. 1, 2, 3, and 4 are attached below.

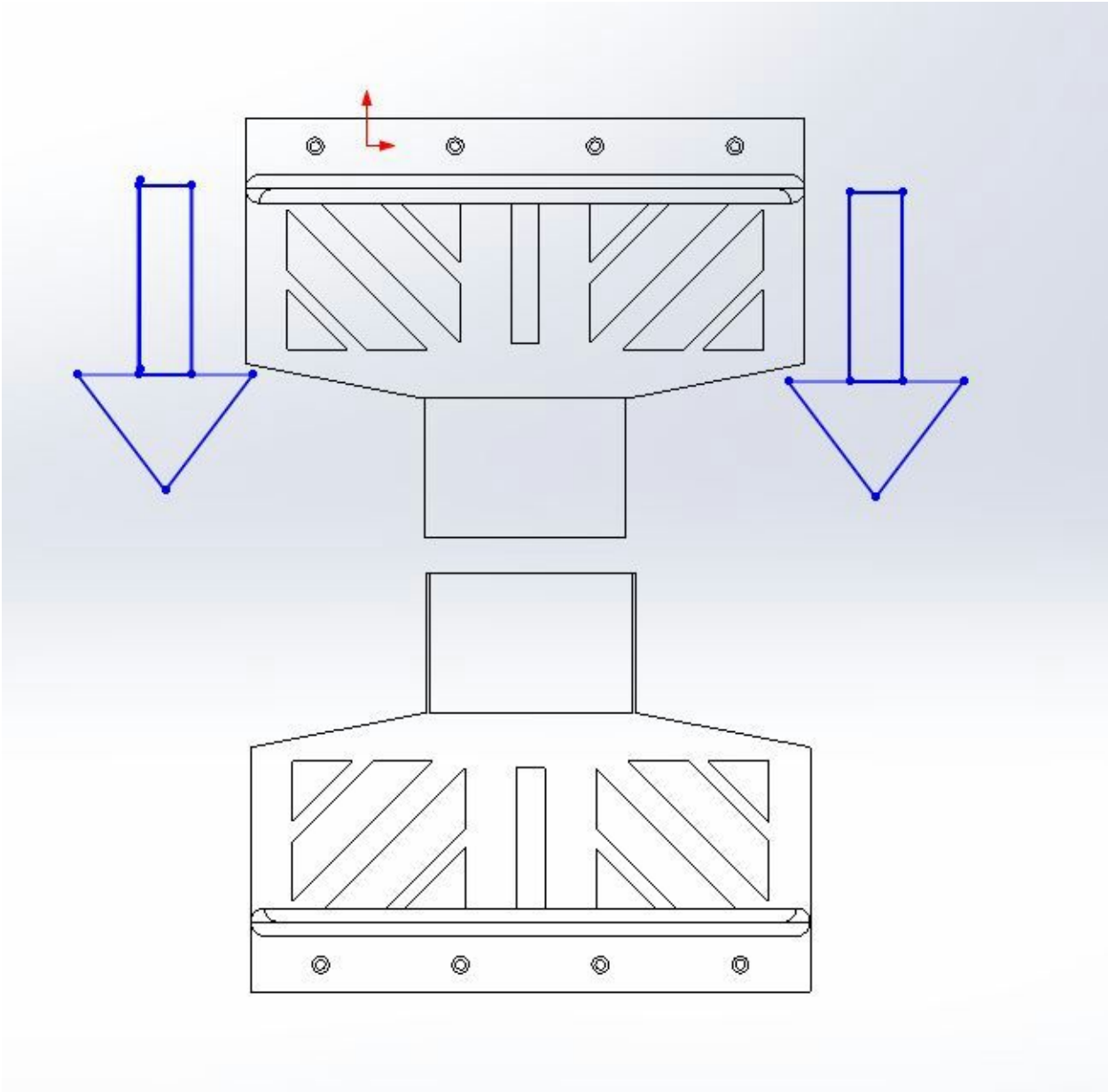

Figure 1. Conceptual diagram USB bracket assembly

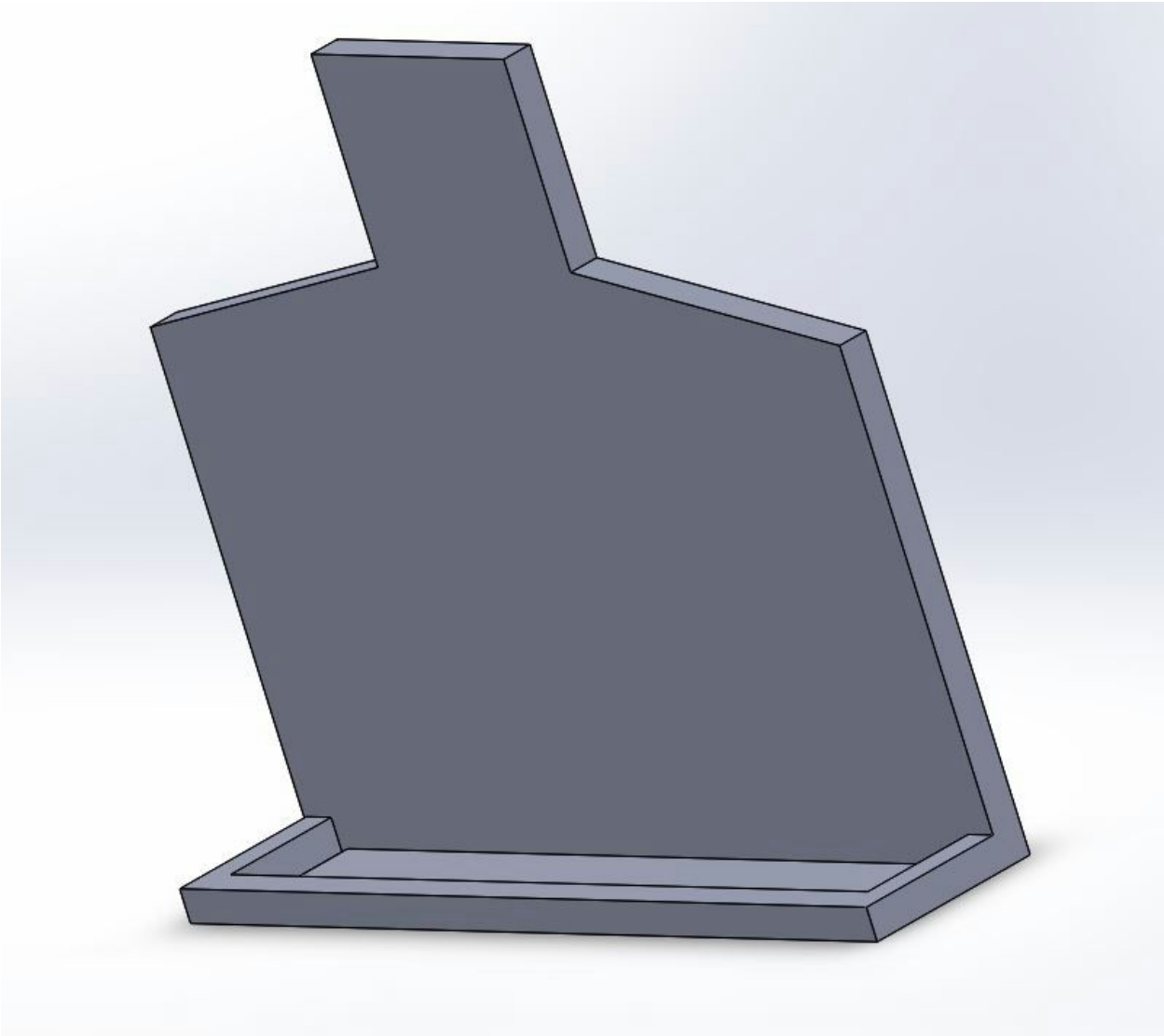

Figure 2. Progression of the USB bracket

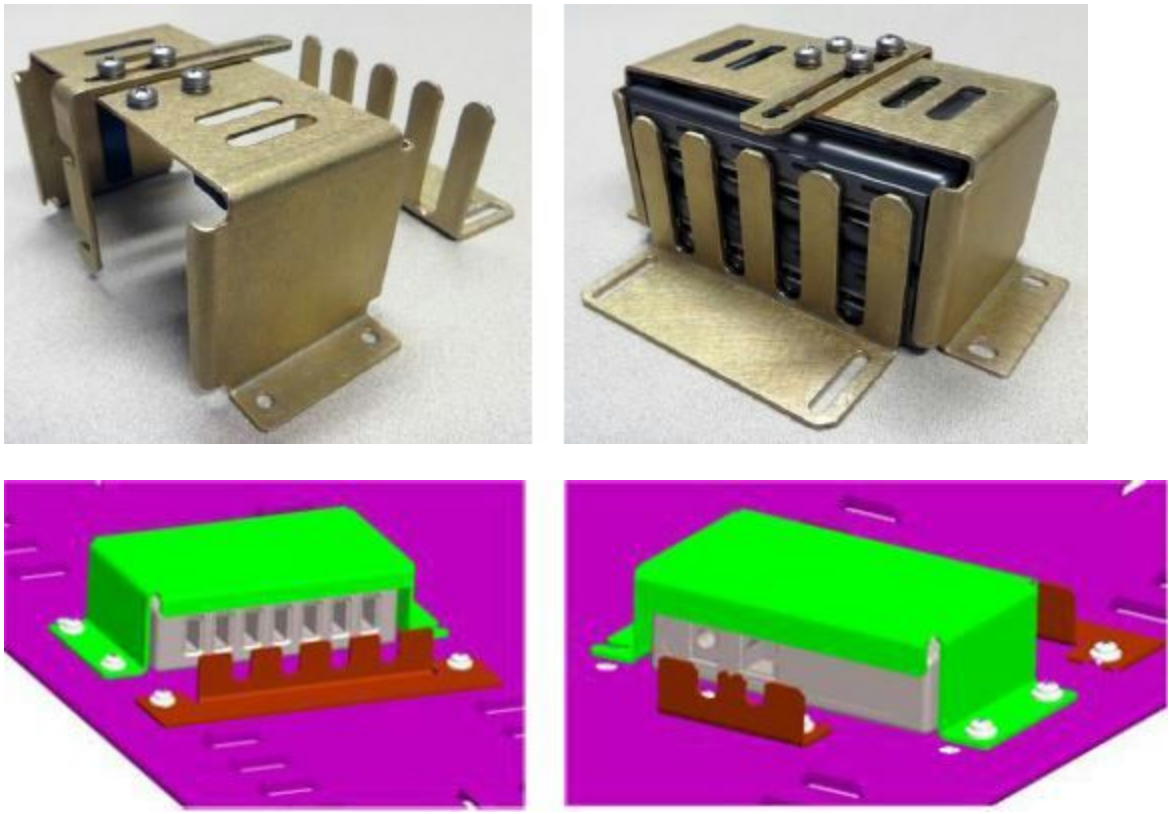

Figure 3. Original USB Bracket

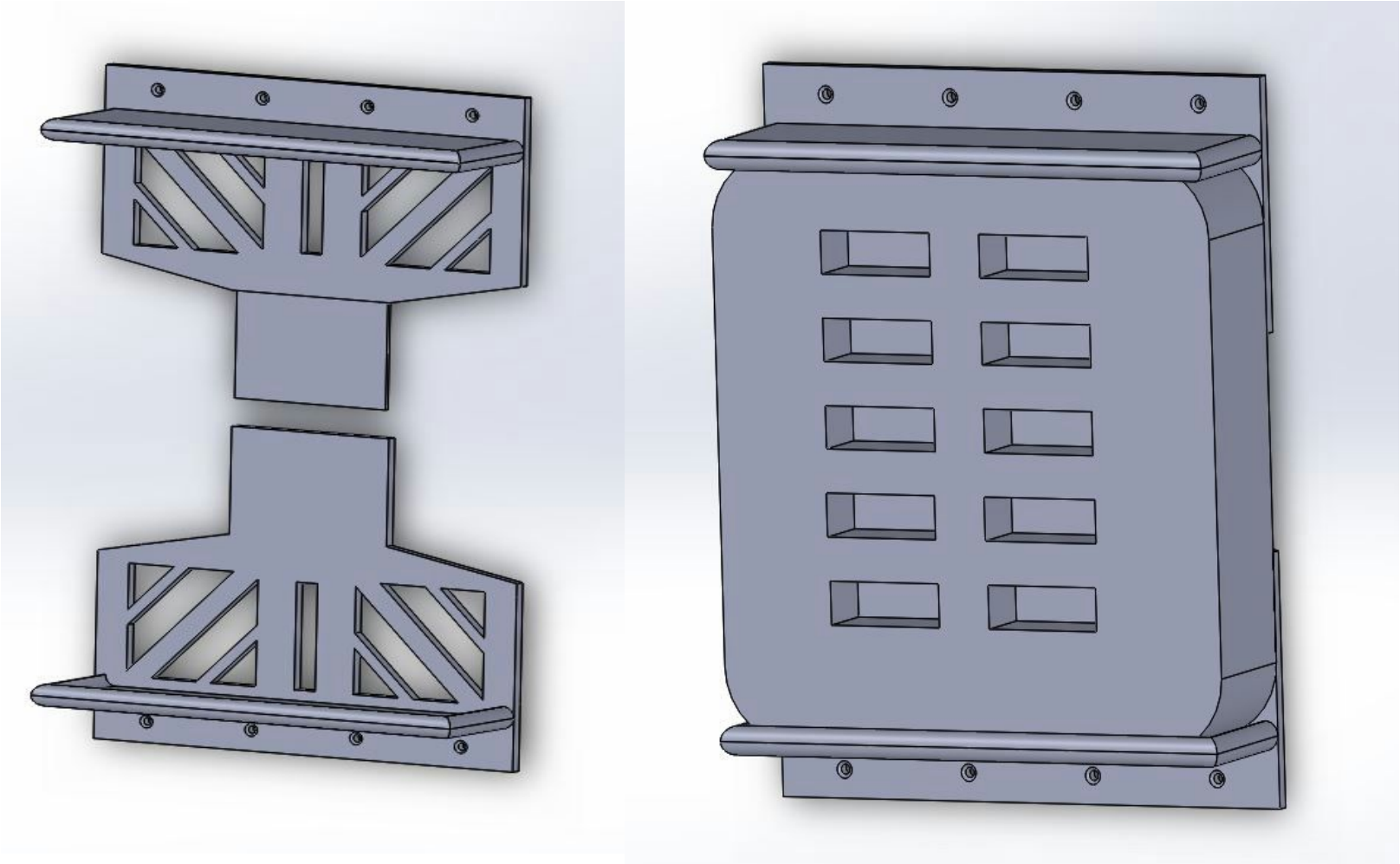

Figure 4. Modified USB bracket to improve efficiency and durability