Alcoa Sustainability Project
Aluminum To-Go Containers
December 5, 2013
EDSGN 100 Section 12
Team 4
Report: Brittany Schraeder
Quad Chart and Brochure: Sam Cheng
Costing: Aleksa Susinskas
Prototype/Model: Tyler Hendrick
Project Website: http://sedtapp.psu.edu/design/design_projects/edsgn100/fa13

Summary of Project

Many to-go food containers used in the Penn State dining hall, are made out of Styrofoam. These to-go containers are not durable, do not insulate well, and cannot be recycled in an efficient manner. Thus, the idea to replace these containers was assessed. Substituting Styrofoam containers at the dining halls with aluminum containers would help to greatly improve these issues. An estimated 1.4 million to-go containers are used annually around Penn State. The most significant impact received from implementing aluminum instead of Styrofoam would be the reduction of the amount of waste generated by Penn State. Students would pay a $3 deposit and receive their aluminum to-go tray from the dining hall, which they could then fill. Once the student is done with the meal, he or she can then bring that container back to the dining hall and choose between two options, receive a clean to-go container or simply turn in the container to get the deposit back onto their card. The deposit ensures that the containers stay in the system. Once a container is broken or damaged, the dining hall staff can properly recycle the container.

Table of Contents

Introduction……...page 1

Concept Development ……page 2- 4

Detailed Concept Development …….page 5-6

Conclusions……...page 6

References…….page 6

Introduction

Alcoa provided numerous groups with a task to increase sustainability on the Penn State campus by creating a new product made of aluminum to replace an existing but inefficient one. Many to-go containers are made out of Styrofoam, which is not durable, does not insulate well, and cannot be recycled in an efficient manner. Thus, the idea to replace these containers was brainstormed; replacing the Styrofoam containers at the dining halls with aluminum boxes would help to improve these issues. By making this change, resources would be saved, therefore generating a more sustainable product. The team definition of sustainability is “self-sufficiency with the capacity to endure generation without wasting resources.”

To begin the process, the team, as well as other teams in the class, researched the different aspects of aluminum such as the mining of aluminum, its recycling process, and aluminum’s elemental properties. Each team presented their findings to the class, which allowed for each group to become informed and receive the necessary data required to complete this project.

Other than campus service, the Al-To-Go’s use can be expanded into the restaurant business as well. In order for restaurants to use this idea, a system would need to be developed to encourage customers to return their containers so that the Al-To-Go boxes may be reused and recycled. For example, restaurants can give discounts for certain amounts of containers returned, which in turn may encourage both the containers to get recycled and the customer to return, thus becoming more eco-friendly. At the same time, this idea may not be very logical for participating restaurants; the recycling system would require a large initial cost and amount of To Go containers in order to keep a steady flow of containers given out and returned,not to mention restaurants stand to lose a great amount of money if consumers outright refuse to return To-Go boxes.

Concept Development

After research was done on aluminum, three ideas were then brainstormed to create a new product. The team looked into aluminum bath caddies, to-go containers, and computer accessories for the computer labs around the university. The team looked at stake holders and vital features for each object and decided that the to-go container would affect more people than the bath caddy or computer accessories. With this in mind, the team decided that the aluminum to-go container was the best option as shown below in the design matrix (Table One).

Table One: Project design matrix

Project Features	Aluminum Bath Caddy	Aluminum To-Go Container	Aluminum Keyboard, Mouse, and Computer Cases
Impact/ Benefit (x3)	6	12	9
Low Cost	5	5	2
Motivation to Recycle	6	12	6
Competition	5	5	3
Amount of Energy Saved (x3)	12	12	15
Office of Physical Plant Buy- In	4	4	1
Ease of Implementation	6	10	2
Total	**44**	**60**	**38**

The top two ideas from the design matrix were then created into surveys. The aluminum computer accessories did not meet the product features that the team found to be most important in order to fulfill the requirements given by Alcoa (shown in table one). Thus, this concept was dropped.

Table Two: Results of aluminum bath caddy survey

	Strongly Disagree	Disagree	Neutral	Agree	Strongly Agree	Total
I would buy an aluminum bath caddy.	2	10	24	15	1	**52**
I would recycle	0	0	4	30	18	**52**

my aluminum bath caddy.						
Plastic bath caddies need improvement.	0	9	19	12	12	**52**
I use a bath caddy.	0	4	0	28	20	**52**
I would buy an aluminum bath caddy over a plastic one.	5	3	14	22	8	**52**

First, the results from the aluminum bath caddy survey (shown in table two) helped the team decide which project to undertake. Because the responses from this survey were not favorable to the product of aluminum bath caddies, this topic was not chosen for the project. Bath caddies appeal to mostly underclassmen and, therefore, this product would not meet the project feature of a large impact on campus. Plus, there is too much competition with other bath caddy companies to ensure that the product be successful. Due to poor responses and the lack of motivation to change, this product idea was dropped.

Table Three: Results of aluminum to-go container survey

	Strongly disagree	Disagree	Neutral	Agree	Strongly agree	Total
I use to-go containers.	1	6	24	20	1	**52**
I would recycle an aluminum to-go container.	0	4	24	24	0	**52**
I would use an aluminum to-go container over a styrofoam one.	0	4	28	10	10	**52**
I would bring my aluminum to-go container back to the dining hall for an incentive.	0	0	22	24	6	**52**

I would still get a meal to-go at the dining hall if I had to return the to go container that I took last time.	0	8	20	12	12	**52**

The results of the aluminum to go container survey (shown in table three) were favorable to the production of aluminum to-go containers. To-go boxes are widely used by students so that they have the ability to purchase food then take it with them on the go or when in a rush. Since numerous students use to-go containers, this product would have a large impact on the environment due to the fact that it can be recycled much more easily and efficiently. Many people responded that they would definitely return or recycle their aluminum to go container if they received an incentive. Also, results showed that they would be more apt to use an aluminum to-go container over a plastic or Styrofoam one. This survey assisted the team in the decision to choose this topic for the project. Because so many students use this every day, the students and the dining halls would be the most affected by this change. The input of Al-To-Go would cause adjustments on campus,for example, students would have to keep track of a container as well as bring it back to the dining hall, rather than simply receiving a new container every time they walk through the door. The dining hall would now have to implement a cleaning and recycling program for returned containers, as well as find a company that would supply or make these containers. In due consideration, Penn State would most likely run this program and simply buy the containers from an outside company.

Detailed Concept Development

In order to develop the final design, the team decided that the original shape and design of the styrofoam container was perfectly fine (shown in figure one), it was only the the material that it was made out of that was required to be changed. Thus, the final design approach was simply to create the same shape of tray and make it out of aluminum (shown in figure two). To cover the team's design a piece of aluminum foil will also be given to the student as they are leaving.

Figure One: Current to-go container

Figure Two: CAD model of to-go container

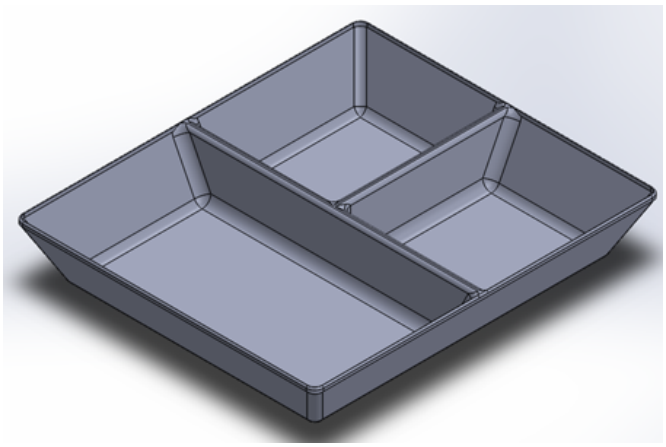

The dimensions are the same as the current to-go container, 10" x 8.69" x 3.25", with the walls being the same thickness as the current to-go container (0.1"). With a total volume of 15.1 in^3. Containers with smaller dimensions can be created for other places like restaurants. However, Penn State currently only uses one size of to-go containers, thus only one size of the aluminum to-go containers would be made for the Penn State campuses.

Table Four: Cost Analysis

	Styrofoam	Aluminum
Area (cm^3)	247.49	247.49
Cost per container	$0.15[1]	$2.54[2]
Estimate annual purchase	(30,000 students get to-go x on average 1.5 a week x 30 weeks) 1.4 million containers	30,000 students get to-go + extras to ensure that enough are bought = 32,250
First cost	Cannot be accurately calculated	$75,465
Annual cost	$210,000	$7,546.50
Ten year cost projection	$2,100,000	$275,806

According to Penn State's sustainability website, Penn State receives their to-go containers from the Dart container[3] company. For a styrofoam container the same size the cost of the styrofoam container and the aluminum container are vastly different, as shown in table four. Using an estimate of the number of to-go containers purchased by Penn State, the first and the annual costs of both types of containers were calculated. The aluminum container would be covered with foil and thus, the cost of the foil had to be factored into the cost of the container. Due to the fact that styrofoam containers are not reusable the first cost and the annual cost remain the same. On the other hand, the first cost of aluminum containers is more expensive than the following years, because aluminum containers due not need to be replaced as readily. Assuming an annual purchase of ten percent of the initial investment of the containers, the cost of the aluminum containers is significantly lower. To keep up with the wear and tear of everyday use, the containers would be replaced every five years.

Conclusions

The Al-To-Go containers have a great deal of positive features attributed to them. Using aluminum trays instead of Styrofoam would considerably reduce the total cost that the University pays for to-go containers. These trays are also easier and more efficient to recycle, causing more people have the motivation to recycle the containers and take a burden off of the environment. With all these benefits and the survey results, the team feels that the students would most definitely be onboard with making this change to the aluminum to-go containers. The team learned how to present a topic in a professional manner and how doing the right kinds of research can make a project really stand out in a crowd.

References

[1] http://www.dartcontainer.com
[2]http://www.vincentmetals.com/1Pricing/Price_Data/
[3]http://sustainability.psu.edu/live/what-penn-state-can-do/recycling-and-waste-management/polystyrene-styrofoam