DESGN 100: Introduction to Engineering Design

Portable Dumpling Maker

Section 10, Team 5

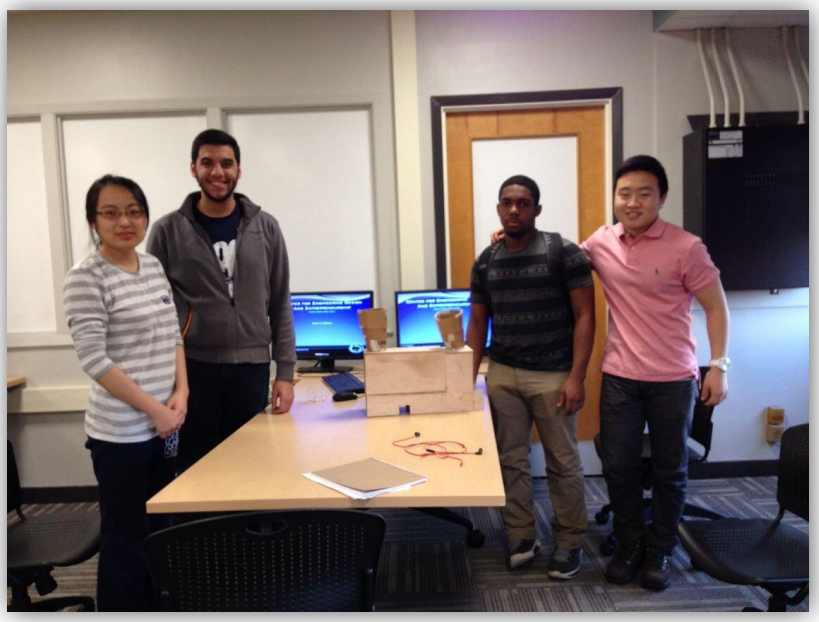

Submitted by Yahya Almumin, Marcus Ford, Brian Kim, Anqi Ren

Submitted to Xinli Wu

Online Report: http://dumplingmaker.weebly.com

2014/11/3

Abstract

by Anqi Ren

This report documents the dumpling maker project designed by Yahya Almumin, Marcus Ford, Brian Kim, and Anqi Ren. In this report, four topics will be further discussed including a description of the design task, the design approach, the final design and its prototype as well as the engineering analysis.

Table of Contents

1. Introduction ····· 4 Anqi Ren

2. Description of the Design Task

2.1 Problem statement ····· 4 Yahya Almumin, Anqi Ren

2.2 Mission statement ····· 5 Yahya Almumin

2.3 Design specifications ····· 5 Yahya Almumin

3 Design Approach

3.1 Project management - Gantt chart ····· 5 Yahya Almumin

3.2 Customer needs assessment ····· 6 Anqi Ren

3.3 Concept generation ····· 6 Yahya Almumin

3.4 Design selection matrices ····· 7 Anqi Ren

4 The Final Design and its Prototype

4.1 Working drawings of the final design ····· 10 Marcus Ford

4.2 Prototype scale and digital images of the prototype ····· 12

4.3 Design features ····· 14 Brian Kim, Anqi Ren

4.4 Operation instructions ····· 15 Brian Kim

5 Engineering Analysis

4.5 Working mechanism ····· 16 Brian Kim

4.6 Cost analysis ····· 18 Brian Kim

5 Summary and Conclusions ····· 19 Anqi Ren

6 Acknowledgement ····· 19 Anqi Ren

1. Introduction

by Anqi Ren

Since the beginning of the Industrial Revolution, machinery has played a major role in the development of human society. It is not a secret that Chinese food industry is taking the advantage of this opportunity to improve its producing efficiency and quality. Dumpling is without doubt one of the most classic traditional Chinese food. In this case, a dumpling maker is in great need for cooks' use, especially for household use which could save time and improve cooking process.

The design project was assigned by Xinli Wu on September 8, 2014. First, the team discussed about the final goals and the concepts of the design. Then all four members brainstormed and came up with several designs. After comparing designs with each other using selection matrices, the team agreed with a final design. Then a prototype was built to enable others to envision the design. Finally the team wrote this report to review the design process.

2. Description of the design task

2.1 Problem statement

by Yahya Almumin, Anqi Ren

Making dumplings takes so much time and effort. The traditional cooking process including making the dough, mixing meat and vegetables to make the fillings and closing the dumplings up can all be implemented by machines. Also, the market suffers a lack of dumpling makers that matches the criteria that will save more money time and effort. A

semi-automatic or an automatic dumpling maker is expected to cost less than $200, make 20 dumplings per minute and be easy to wash.

2.2 Mission statement

by Yahya Almumin

The mission is to find and build the best dumpling maker machine that will be costly efficient and will minimize time and effort.

2.3 Design specifications

by Yahya Almumin

In order to accomplish the design with the best use for the consumer certain design specification must be met:

1-The dumpling maker should be automatic or semi-automatic.

2-The dumpling maker should produce no less than 10 dumplings per minute on average.

3-The material cost for the dumpling maker should not exceed $200 unless it can be justified.

4-The dumpling maker should be safe as a food processor, easy to maintain, safe to use, and dishwasher safe.

3. Design approach

3.1 Project management - Gantt chart

by Yahya Almumin

Table 1: Gantt Chart

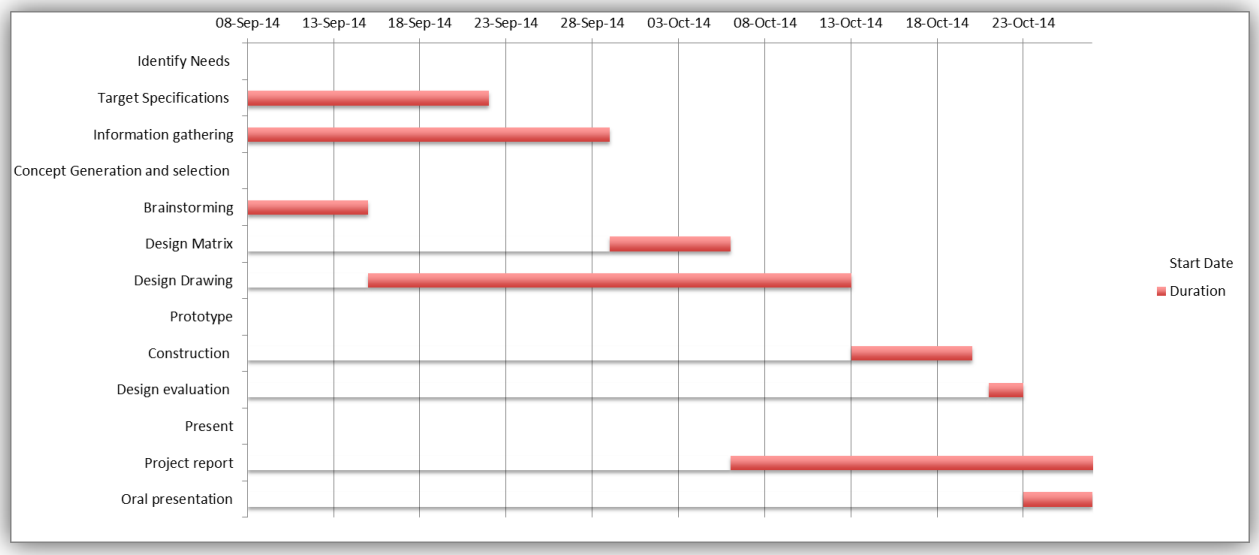

3.2 Customer needs assessment

by Anqi Ren

By interviewing several Chinese restaurants, the team has concluded an assessment of customer needs for the dumpling machine. All of the employees stated that they need the machine to be small, durable, easy to use, cost efficient and easy to wash.

When asked about the materials, all of them agreed that a stainless design would be the best choice. One of them mentioned that it would be better if the machine could throw the dumplings directly to the spoiled water.

Special thanks to Ms. Wu from Chopstick Express of State College, PA, employees from China Dragon of State College, PA, and Hunan Wok of State College, PA.

3.3 Concept generation

by Yahya Almumin

The goal of this project as the statements state is to provide dumpling maker with the maximum ease of use and minimum price (Price ceiling $200). Therefore, Comparing different ideas and designs of dumpling makers has allowed us to reduce the number of designs which can we compare directly. After reducing the number to 5 different designs and using matrices that shows specific the pros and cons of each design, it was the time to judge which design has a significant advantage upon the others. By looking closely at the design we chose as a prototype, it can be seen that it has been derived from the main goal of the project.

3.4 Design selection matrices

by Anqi Ren

The team came up with five design ideas totally. Each of them has its own advantages and disadvantages. In order to choose one for the final design, all members voted on the following Design Selection Matrices to have a quantitative view of the designs.

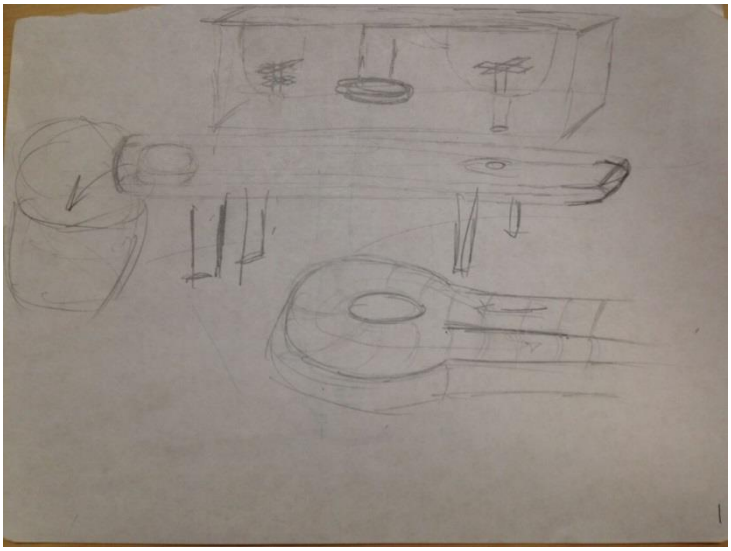

Figure 3.4.1 Design#1

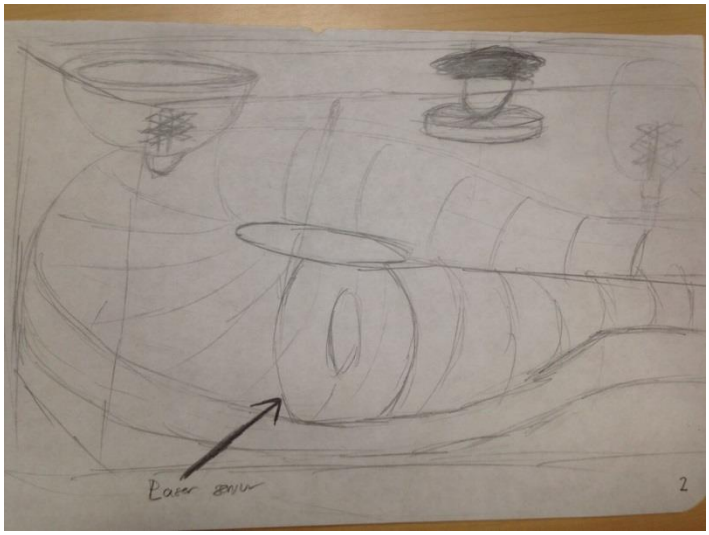

Figure 3.4.2 Design#2

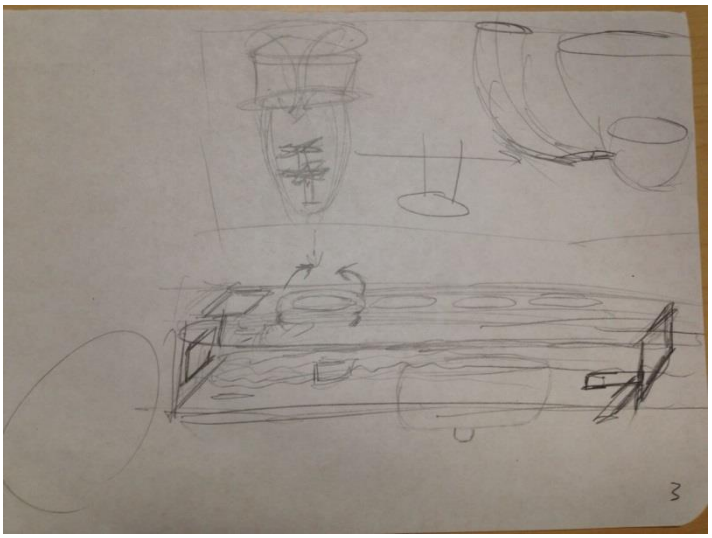

Figure 3.4.3: Design#3

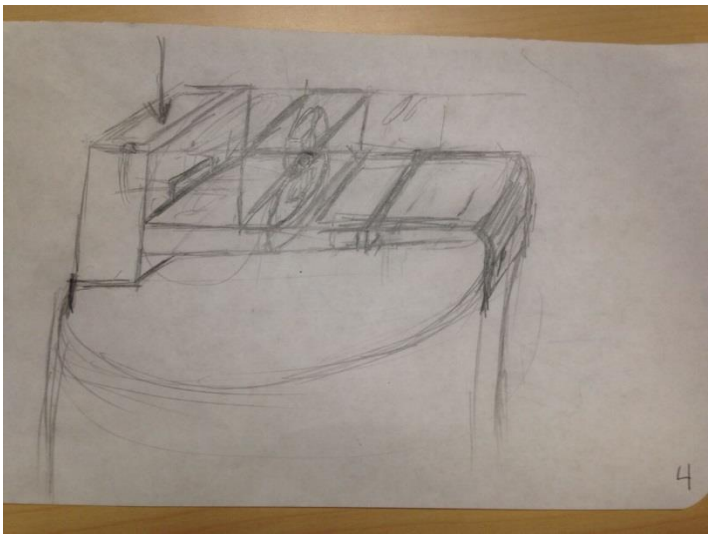

Figure 3.4.4: Design#4

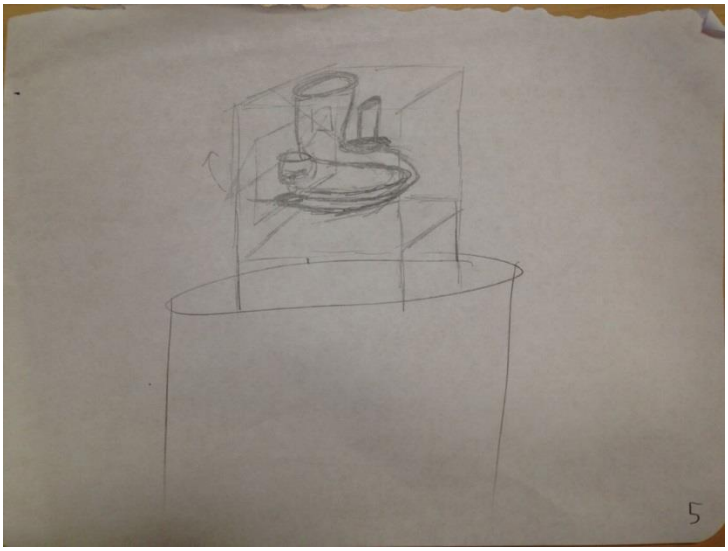

Figure 3.4.5: Design#5

Table 2: Design Selection Matrices

	Design #1	**Design #2**	**Design #3**	**Design #4**	**Design #5**
Selection Criteria					
Ease of handling	-	0	-	+	+
Ease of use	+	0	+	+	0
Readability of setting	+	+	-	+	0
Efficiency	-	0	+	+	+
Durability	-	+	-	+	0
Ease of manufacture	-	0	-	+	0
Portability	-	-	-	+	+
Ease of wash	-	+	-	+	0
Sum +'s	2	3	2	8	3
Sum 0's	0	4	0	0	5
Sum -'s	6	1	6	0	0
Net score	-4	2	-4	8	3
Rank	4	2	4	1	3

4. The final design and its prototype

4.1 A complete set of working drawings of final design

by Marcus Ford

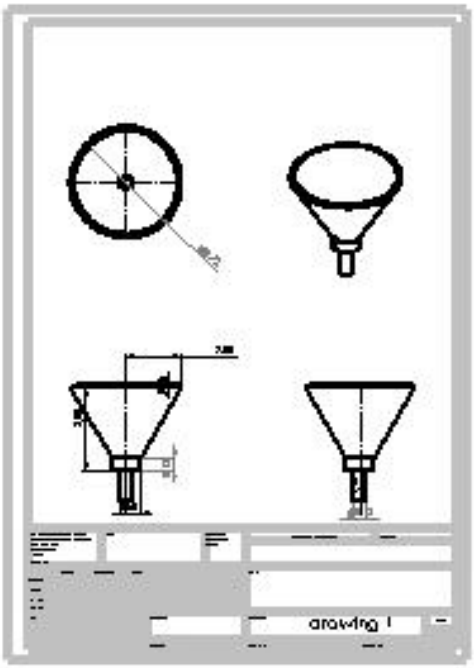

Figure 4.1.1 Detailed Drawing

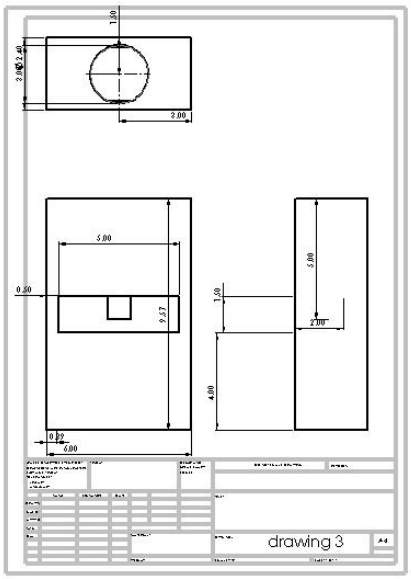

Figure 4.1.2 Detailed Drawing

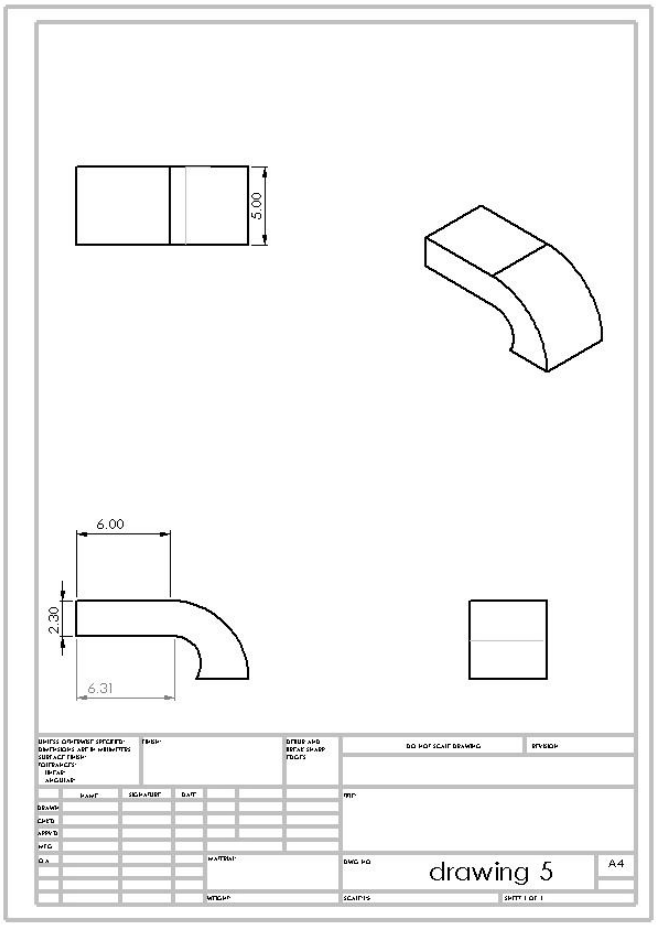

Figure 4.1.3 Detailed Drawing

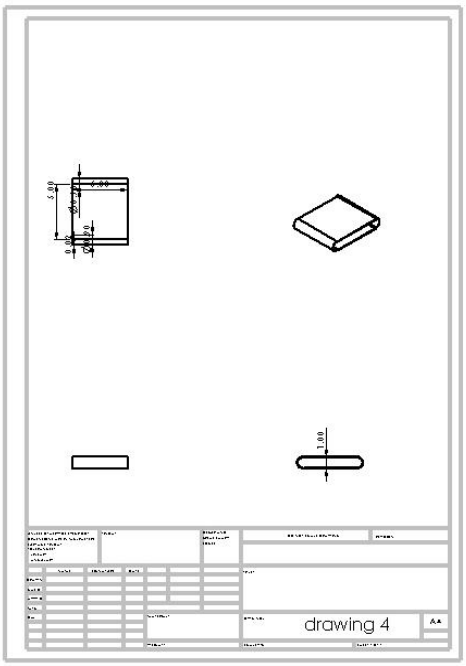

Figure 4.1.4 Detailed Drawing

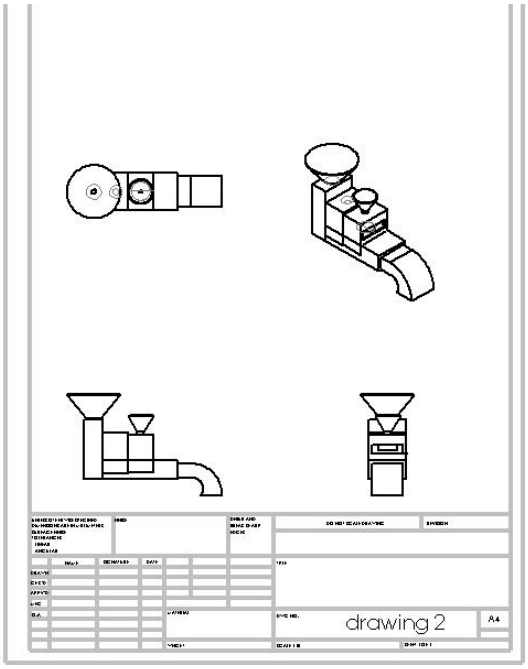

Figure 4.1.5 Full Drawing

4.2 Prototype scale and a digital images of prototype

The Prototype scale is 1:1

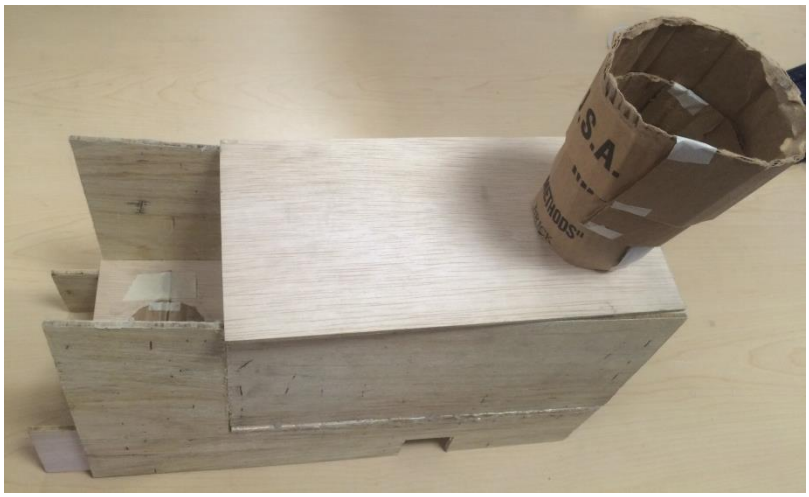

Figure 4.2.1 Prototype

Figure 4.2.2 Prototype

Figure 4.2.3 Prototype

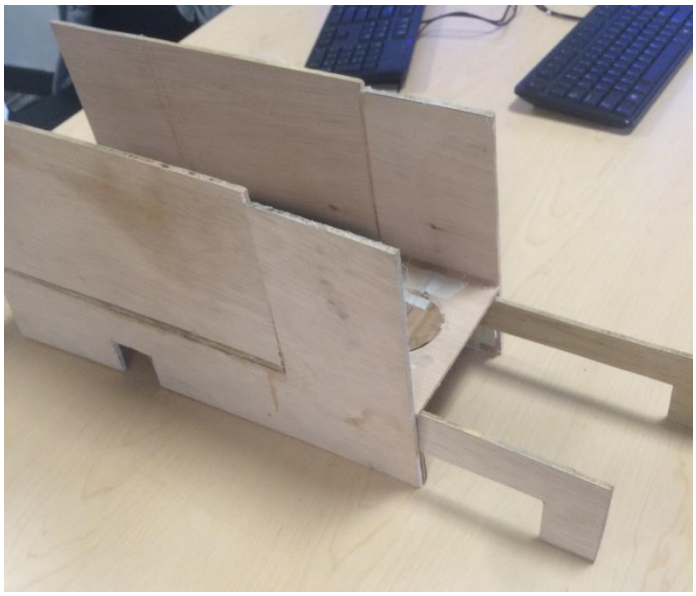

Figure 4.2.4 Prototype - extension

Figure 4.2.5 Prototype - blender

4.3 Design features

by Brian Kim, Anqi Ren

The device is made out of high quality stainless steel that will enshroud the device with its strength and heat resistance and act as the dumpling flattener (made of molded stainless steel),

durable plastics a standard conveyer belt that runs in 5 inches of width and 6 inches of length and its corresponding parts such as the 1 inch lift and the cylindrical materials that helps it rotate, blenders, a circuit board its circuits to allow the device to be powered by electricity, a piston that allows the dumpling flattener to move up and down, a blade to measure out the dough and cut it to be extracted out of the dough making compartment, and electric motors. It is designed to produce up to 20 dumplings per minute. This wonderful piece of machinery not only produces dumplings, it also mixes the dough and the fillings to the perfect consistency. The blenders for mixing dough and fillings are extensional so customers can adjust the amount of ingredients they want to put in. The edges of the bottom are also extensional so that it can fit most of the household pots.

The machine is power by simply plugging it into normal everyday electric outlet. The powerful electric motor inside the stainless steel water tight housing is completely safe to put in the dishwasher along with the rest of the devices. The entire assembly easily comes apart of easy cleaning and operation is simple and safe.

4.4 Operation instructions

by Brian Kim

The device has been created for simple user interface. The only operation instructions are accordingly…

1. Place the dumpling maker device on any sized pot, using the extension hooks to comply to any sized pot for a secure fit.
2. Turn device switch to on.

3. Place flour and water (¼ cup of water for every cup of flour) into the first dough mixing compartment.
4. Place dumpling filler ingredients within the second, designated compartment.

5. Engineering Analysis

5.1 Working mechanism

by Brian Kim

Our device works accordingly…

1. Place dumpling maker on any sized pot. If the pot is large in diameter, than use the extension hooks to secure the device on the pot securely.
2. Turn Dumpling Maker on
3. The user will insert flour and and water (1/4 cup of water for every cup of flour) into the first dough mixing compartment. The compartment has blades within it to mix the flour and water thoroughly to create dough.
4. The compartment will extract a uniform amount of dough to create a 4 inch diameter dumpling wrapper.
5. The piece of dough will be transported out of the dough mixing compartment.
6. The piece of dough will then be smashed into a perfect, circular dumpling wrapper.
7. The dumpling wrapper will then be transported, by a conveyer belt, into the final section of the device.

8. User will insert ingredients for the dumpling fillings within the designated fillings compartment beforehand. The compartment also has blades within it to mix the ingredients together thoroughly.
9. The dumpling filler compartment will extract enough of the filler to create an inch diameter ball of the filler on the center of the dumpling wrapper.
10. A mechanism that is embedded on the surface beneath the dumpling filler compartment will have an automatic dumpling presser (mechanism that folds the dumpling into the proper shape, with uniform creases on the portion that is connected) that will seal the dumpling and then spin on its axis to drop it directly underneath it into the pot that the device is resting on.
11. The process will repeat itself constantly, as long as the device is on and the two mixing/extraction compartments are filled, at a rate of 1 dumpling made every 10 seconds. The device is powered by an electric motor and will run the machine based on designated time intervals. The blenders will stay running constantly to ensure that everything is well mixed and that the materials will not lie dormant.
    a. The dough being extracted will take 1 second.
    b. The dough being transported under the dough flattener and the flattening process will take 3 seconds
    c. The dough being transported under the fillings compartment/extractor will take 2 seconds
    d. The fillings being extracted and placed on the dumpling wrapper will take 3 seconds

e. The flipping of the dumpling presser on its axis and the placing of the dumpling into the pot will take 0.5 second.

5.2 Cost analysis

by Brian Kim

- Material will be created out of stainless steel
    - 1 sq foot of stainless steel (20 ga/0.09 cm thickness) is approximately $13.
    - 470 sq inches of stainless steel used to enshroud the device and the amount of steel needed to be melted and molded into the dumpling smasher.
    - 470 sq inches/144 sq inches = 3.26 sheets of 1 sq foot stainless steel metal used.
    - 3.26 * $13 = **$42.43**
- Conveyer belt
    - Conveyer belt will cost approximately **$10**, according to http://www.safeconveyor.com/Belt-Pricing.php
- Electric motor
    - Approximately, a wholesale motor is $20 since retail price is approximately $66.
    - We need 4 motors, so the price of electric motors is **$80**
- Piston
    - Approximately, a wholesale piston is $15 since the retail pricing is approximately $40.

- We need 1 piston, so the price of the piston is **$15**

- **Circuit to power the device (time-interval based device)**
  - A circuit board and its components are approximately **$15** if bought at wholesale price.

- **Blade**
  - Approximately 8 dollars according to Amazon. So the wholesale price is assumed to be approximately **$4.**

Total = $164 (+/- $10 due to estimation error)

6. Summary and conclusions

by Anqi Ren

The team was satisfied with the final design because it met all the concepts that were originally set. All team members enjoyed the teamwork throughout the project. The team not only learned some engineering design skills start with assessing customer needs, followed by using design selection matrices to choose the best design and use CAD to work on detailed drawings, but also built up cooperation and problem-solving skills. All members showed up to labs and team meetings, and contributed their own ideas when discussing about the designs and making the prototype.

In conclusion, creativity and participation of every single member in the group lead to the success of getting the final design done.

7. Acknowledgement

by Anqi Ren

Special thanks to Pr. Xinli Wu, who guided the team and taught everything they needed to know to get the project done. The team would also like to thank the teaching assistant Jeremy Barnhart who helped the team comp up with ideas and make improvements to the final designs.