Online Design Portfolio

EDSGN 100
Section 010
Amanda Perez

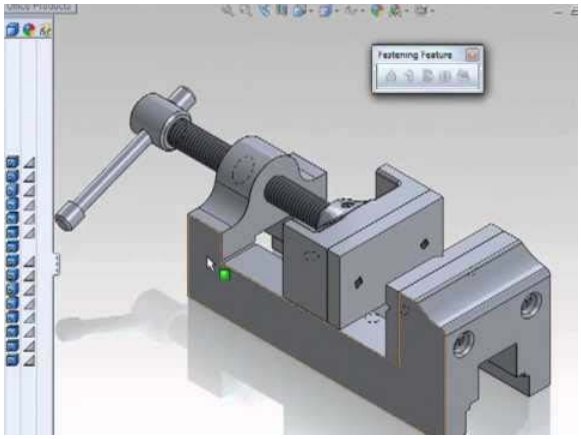

Date of submission: 12/4/15

Abstract

This online design portfolio was created in EDGSN 100 course 2015 fall. The portfolio contains my resume, 2 design projects, and Solidworks assignments.

Table of Contents

- Resume…….,,,……4
- Course syllabus……..6
- Practice problems and exercises……8
- Design Project I…….23
- Design Project II……....26
- Summary and conclusions…….30
- References ……31

Resume

Amanda Perez

522 E Ashdale Street

(267)-423-2152

Philadelphia, PA 19120

amanda.perezazp5230@gmail.com

SKILLS

- Bilingual: English/Spanish with the ability to translate, read, write
- Ability to mediate in problematic situations with consumers
- Able to work within a team and assume leadership position
- Experience in selling to customers
- Extroverted, diligent, and focused individual with ability to work efficiently with people

EDUCATION

Pennsylvania State University, Abington, PA Expected: 2017

Major: Civil Engineering; Spanish

EXPERIENCE

Sears, Philadelphia, PA

Salesperson

- Sold appliances and protection plans to consumers June 2015-August 2015
- Inventory
- Finalized merchandise orders
- Customer service: aided customers with shipping orders

Quails, Philadelphia, PA July 2013- January 2015

Cashier/Salesperson

- Assemble significant financial paperwork to distribute to corporate offices
- Consult/consolidate with superiors when given markdowns
- Provide expertise to advise clients in selecting proper merchandise
- Arrange/ finalize suit orders to large suit vendors
- Vend to consumers
- Train new employees to safeguard their amenability with company protocols

Golden Block Beauty Supply, Philadelphia, PA March 2010 –July 2011

Cashier/ Clerk

- Wielded profits
- Advised and assisted customers with knowledge of products
- Prepared and sterilized equipment for body piercings
- Maintained inventory
- Finalize shipping orders to obtain new merchandise for the business

TECHNICAL SKILLS

Computer Capable: AutoCAD, Solid Works, C++, MATLAB, Microsoft Office, R

Course Syllabus

Course professor:	Xinli Wu, Ph.D., P.E.
Phone number:	(814)863-1537
Fax number:	(814)863-7229
E-mail address:	Xinli@psu.edu
Office hours & location:	1:10 - 2:00 PM, Tuesday, and/or by appointments, 213-S Hammond Building
Course Number & Class Time:	EDSGN 100 Section **009:** 2:30 – 4:25 PM, MWF EDSGN 100 Section **010:** 4:40 – 6:35 PM, MWF

Teaching Assistants:	**Section 009:** Jeremy D. Barnhart, and Paul R. Perreault, Jr. **Section 010:** Nick A. Petrunyak, and William A. Haunstein

---

Course overview and objectives:

This is a design-driven course with emphasis placed on skills such as: team-working, communication skills (graphical, oral, and written), and computer-aided design and analysis tools. The course will introduce students to the engineering approach to problem solving with strong references to basic science and math skills, as well as testing and evaluating design ideas by building prototypes. The design projects are the total of at least 30 hours of in-class work (one third of the course). Two design projects will be assigned during the semester. The design projects will require the students to work in a team. **The course grade for the students will reflect their abilities to function effectively as team players.**

Skills acquired by students during the course:

Computing: Solid Modeling/CAD, EXCEL (spreadsheet), PowerPoint (multimedia presentation)

Internet Skills:	Designing and publishing a basic webpage
Graphics:	Sketching, orthographic projections, multiview drawings, scales, dimensioning, isometric pictorial, oblique pictorial, sections, working drawings
Lab Skills:	experimental methods, data acquisition & analysis, prototype building & testing
Design Methods:	customer needs assessment, concept generation, design selection matrices, design for assembly- disassembly, safety, cost effectiveness, teamwork, and other constraints as need by the project

Practice problems and exercises

Session 1
Introduction to SolidWorks

Overview:
This will introduce the basic functions of SolidWorks including: Extruded Boss/Base, Extruded Cut, and Fillets (pronounced fill-its). After completing the tutorial, you will use what you have learned to create two different parts.

Tasks:
1. Complete Tutorial - Lesson 1: Parts

2. Use the skills learned from the tutorial to create a solid model of a duplex outlet cover plate.
   a) Observe the dimensions of the duplex outlet cover plate.
   b) Review the cover and determine the CAD functions needed to create the solid model.
   c) Design the solid model according to the specifications.
   Save the file as outletplate

3. Draw a solid model of a light switch cover. a) Observe the dimensions of the duplex light switch cover below. b) Create a solid model of the light switch cover. Save your file with the name switchplate

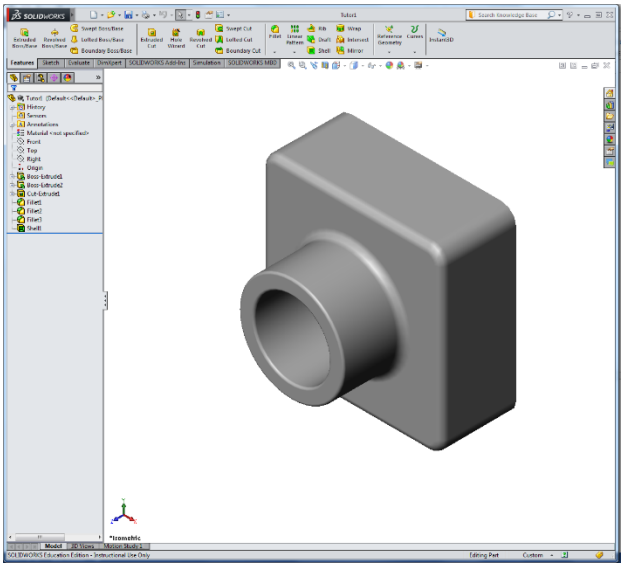

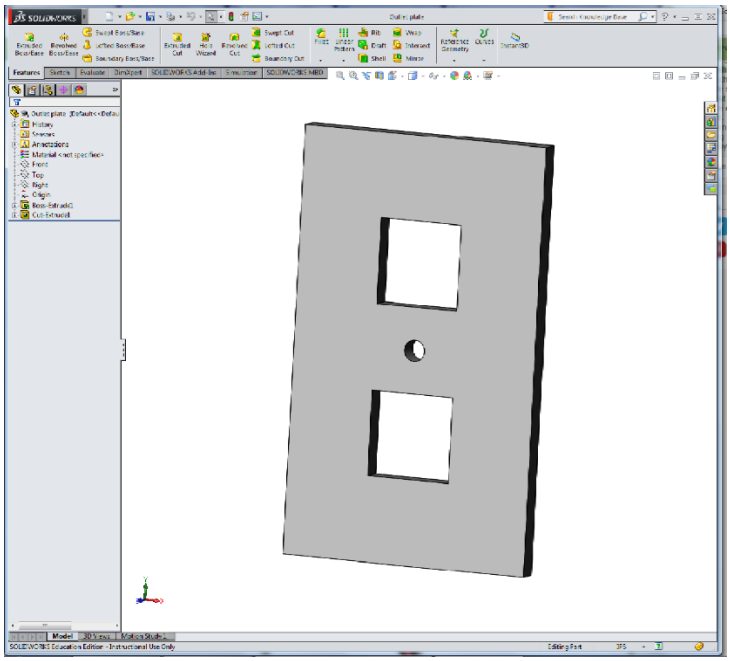
SOLIDWORKS
Outlet plate
Features
Sketch
Evaluate
DimXpert
SOLIDWORKS Add-Ins
Simulation
SOLIDWORKS MBD
History
Sensors
Annotations
Material <not specified>
Front
Top
Right
Origin
Boss-Extrude1
Cut-Extrude1
Model
3D Views
Motion Study 1
SOLIDWORKS Education Edition - Instructional Use Only
Editing Part
IPS

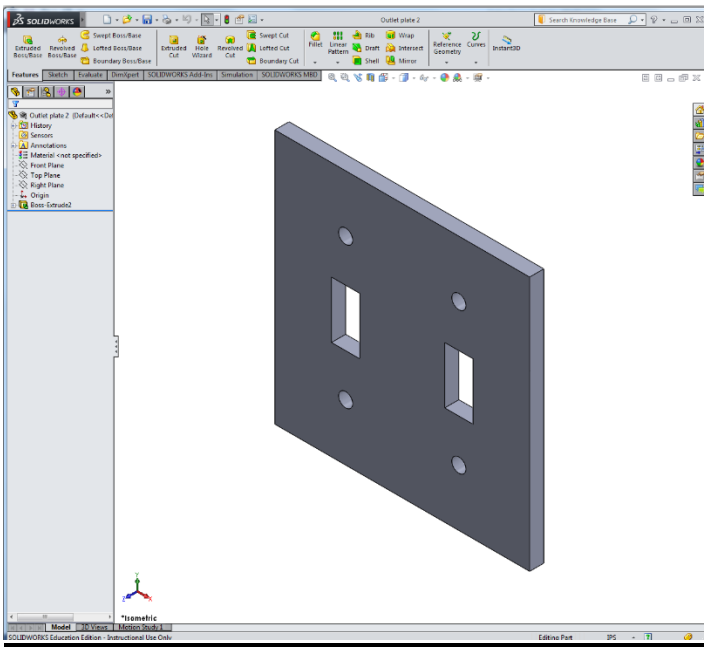
SOLIDWORKS
Outlet plate 2
Features
Sketch
Evaluate
DimXpert
SOLIDWORKS Add-Ins
Simulation
SOLIDWORKS MBD
History
Sensors
Annotations
Material <not specified>
Front Plane
Top Plane
Right Plane
Origin
Boss-Extrude2
*Isometric
Model
3D Views
Motion Study 1
SOLIDWORKS Education Edition - Instructional Use Only
Editing Part
IPS

Session 2
Assembly Basics

Overview:
The shell feature, advanced modeling, and the process of combining multiple parts (mating) in an assembly will be introduced

Tasks:

1. Complete Tutorial - Lesson 2: Assemblies

2. Using the light switch cover from Session 1, design and model a fastener to complete an assembly. The fastener design should adhere to the following criteria:
   a) The fastener must be longer than the thickness of the switchplate.
   b) The fastener must be 0.25 inch in diameter.
   c) The head of the fastener must be larger than the hole in the switch plate
   d) Save the model as fastener.

3. Create a new Assembly file to assemble four fasteners to the light switch cover. Save the file as switchplateassembly

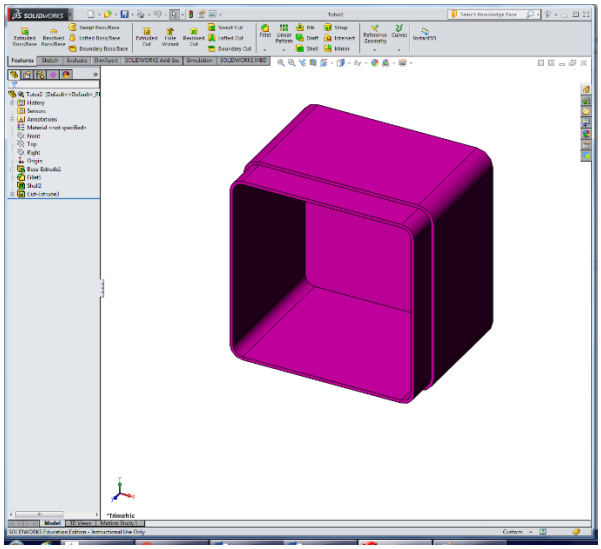

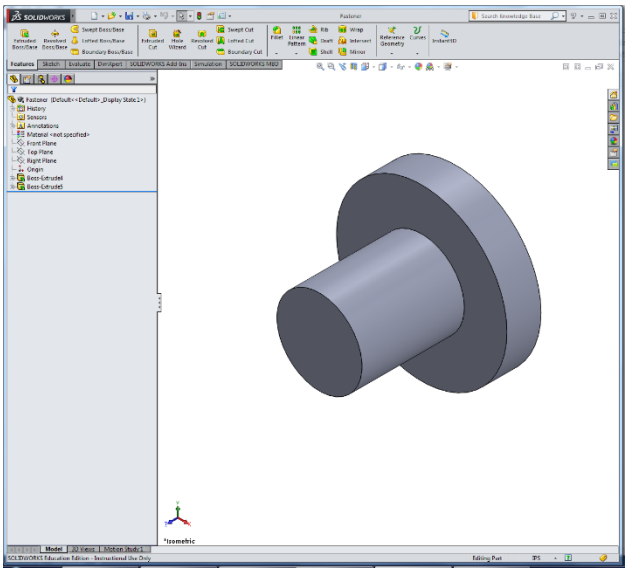
SOLIDWORKS
Fastener
Features
Sketch
Evaluate
DimXpert
SOLIDWORKS Add-Ins
Simulation
SOLIDWORKS MBD
History
Sensors
Annotations
Material <not specified>
Front Plane
Top Plane
Right Plane
Origin
Boss-Extrude1
Boss-Extrude1
*Isometric
Model
3D Views
Motion Study 1
SOLIDWORKS Education Edition - Instructional Use Only
Editing Part

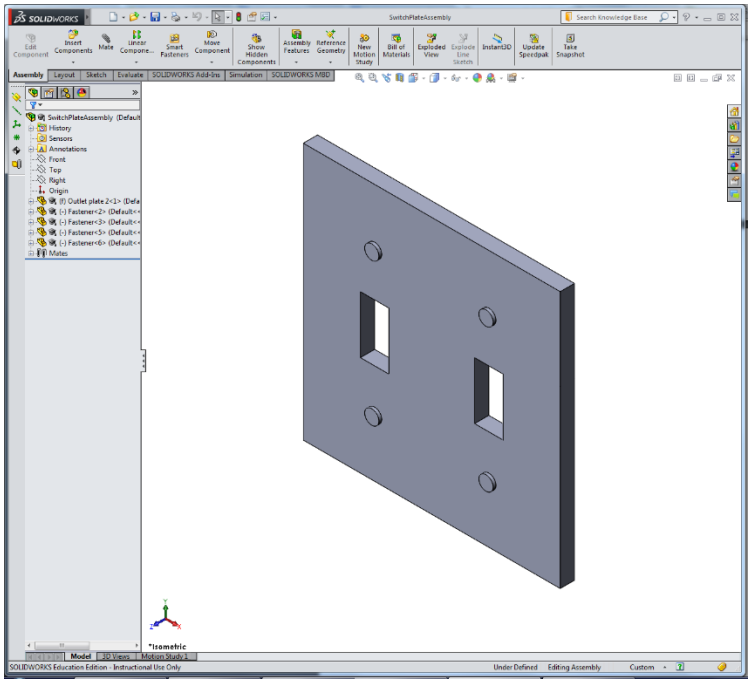
SOLIDWORKS
SwitchPlateAssembly
Search Knowledge Base
Edit Component
Insert Components
Mate
Linear Compone...
Smart Fasteners
Move Component
Show Hidden Components
Assembly Features
Reference Geometry
New Motion Study
Bill of Materials
Exploded View
Explode Line Sketch
Instant3D
Update Speedpak
Take Snapshot
Assembly
Layout
Sketch
Evaluate
SOLIDWORKS Add-Ins
Simulation
SOLIDWORKS MBD
SwitchPlateAssembly (Default
History
Sensors
Annotations
Front
Top
Right
Origin
(f) Outlet plate 2<1> (Defa
(-) Fastener<2> (Default<<
(-) Fastener<3> (Default<<
(-) Fastener<5> (Default<<
(-) Fastener<6> (Default<<
Mates
*Isometric
Model
3D Views
Motion Study 1
SOLIDWORKS Education Edition - Instructional Use Only
Under Defined
Editing Assembly
Custom

Session 3
Drawings

Overview:
The procedure for representing 3D solid models (part files) as 2D drawings with dimensions will be introduced.

Tasks:
1. Complete Tutorial - Lesson 3: Drawings
2. The following exercise uses the model from the previous session to create a dimensioned drawing.

a) Create a new A-size ANSI standard drawing template.
b) Upload your Tutor2 model onto the template.
c) Create Front and Top views. Add an Isometric view.
d) Import the dimensions from the part.
(Import Options ☑ Import Annotations ☐Design Annotatio
Add extra remaining dimensions.
e) Create a note on the drawing to label the wall thickness.
(Wall Thickness=4 mm)
f) Save your file as tutor2drawing

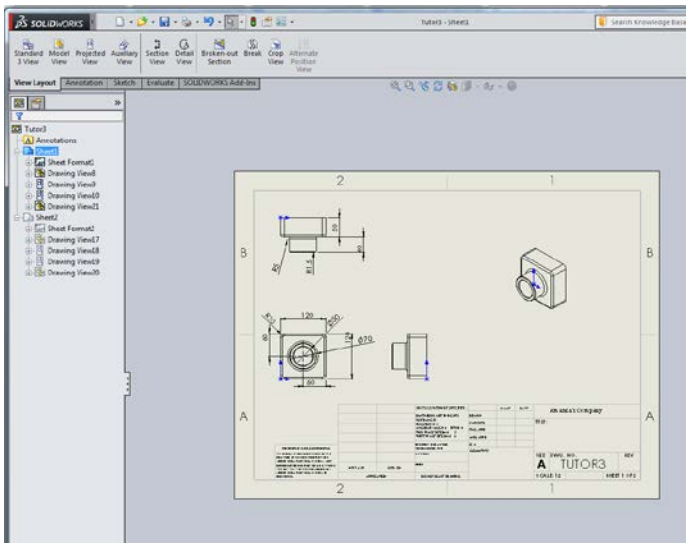

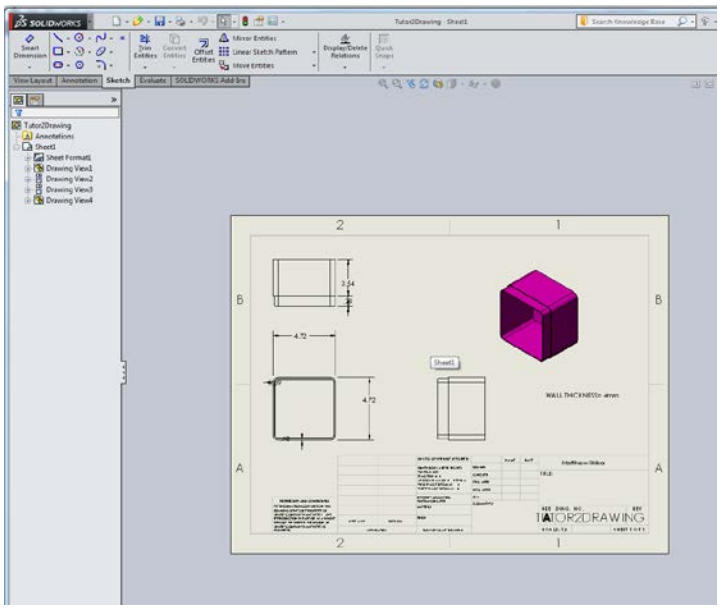
SOLIDWORKS
Tutor2Drawing - Sheet1
Search Knowledge Base
Smart Dimension
Trim Entities
Convert Entities
Offset Entities
Mirror Entities
Linear Sketch Pattern
Move Entities
Display/Delete Relations
Quick Snaps
View Layout
Annotation
Sketch
Evaluate
SOLIDWORKS Add-Ins
Tutor2Drawing
Annotations
Sheet1
Sheet Format1
Drawing View1
Drawing View2
Drawing View3
Drawing View4
2
1
B
A
3.54
4.72
4.72
Sheet1
WALL THICKNESS= 4mm
TITLE:
SIZE
DWG. NO.
REV
SCALE: 1:1
SHEET 1 OF 1
TUTOR2DRAWING

Session 4
Design Tables

Overview:
The use of a Design Table will be implemented to effectively alter part dimensions.
Tasks:

1) Complete Tutorial - Design Tables

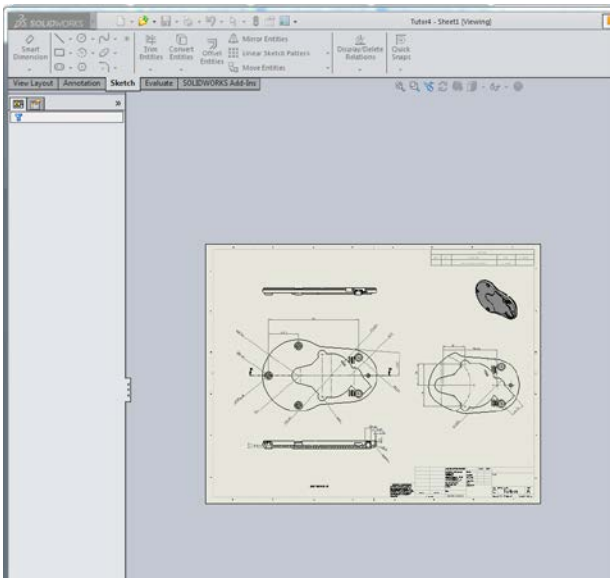

Session 5
Advanced Drawings

Overview:
Procedures of dimensioning different drawing views, creating detailed and crop views, annotating exploded drawings, and creating and editing a bill of materials (BOM) will be implemented.

Tasks:

1. Complete Tutorial - Advanced Drawings
2. The following exercise uses a model created in Session 1:
   a) Open switchplate and shell the part to 0.1 inches.
   Add a front radius of 5 mm.
   b) Create a new A-size ANSI standard drawing template.
   c) Create a drawing for switchplate
   d) Add dimensions and two detail views.

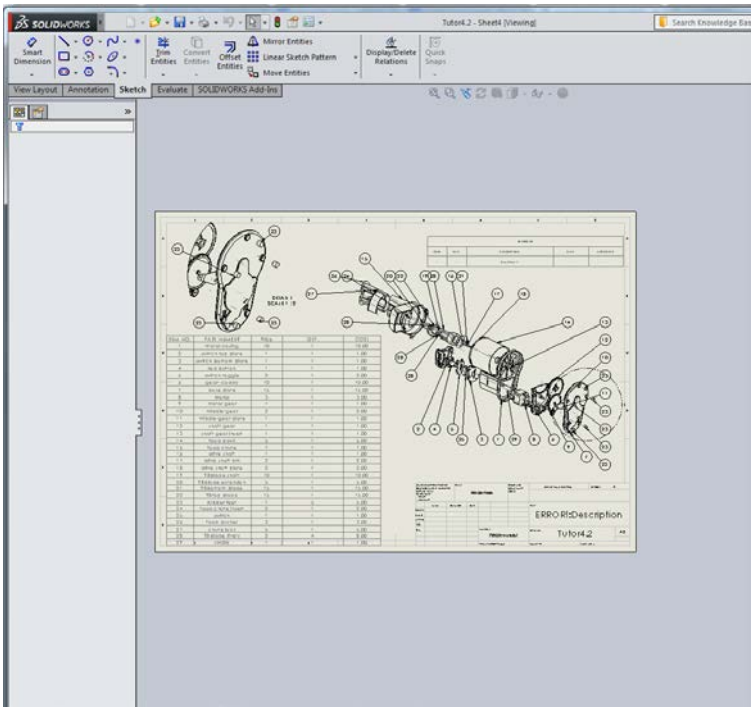

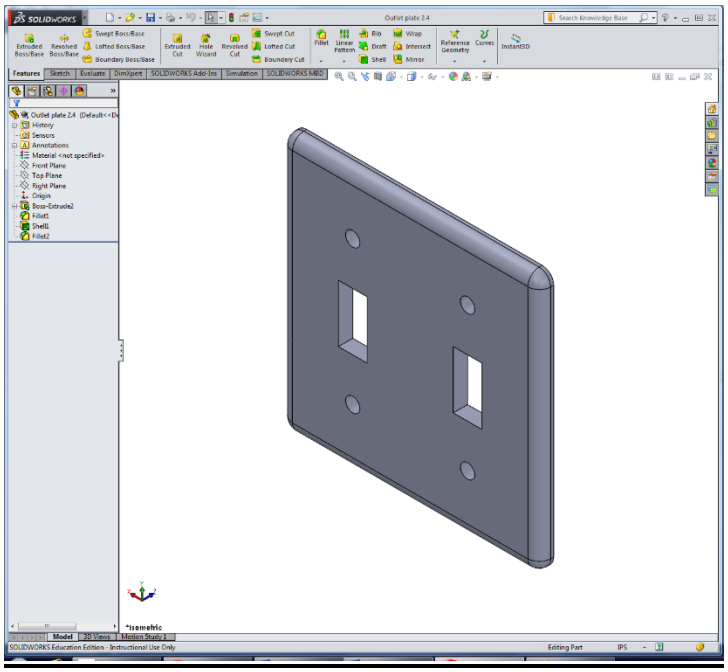
SOLIDWORKS
Outlet plate 2.4
Search Knowledge Base
Extruded Boss/Base
Revolved Boss/Base
Swept Boss/Base
Lofted Boss/Base
Boundary Boss/Base
Extruded Cut
Hole Wizard
Revolved Cut
Swept Cut
Lofted Cut
Boundary Cut
Fillet
Linear Pattern
Rib
Draft
Shell
Wrap
Intersect
Mirror
Reference Geometry
Curves
Instant3D
Features
Sketch
Evaluate
DimXpert
SOLIDWORKS Add-Ins
Simulation
SOLIDWORKS MBD
Outlet plate 2.4 (Default<<D
History
Sensors
Annotations
Material <not specified>
Front Plane
Top Plane
Right Plane
Origin
Boss-Extrude2
Fillet1
Shell1
Fillet2
*Isometric
Model
3D Views
Motion Study 1
SOLIDWORKS Education Edition - Instructional Use Only
Editing Part
IPS

Session 6
Revolves & Sweeps

Overview:
The use of Revolved Boss/Base and Swept Boss/Base will be introduced and implemented.

Tasks:
1. Complete Tutorial - Revolves and Sweeps
2. Create a Candle Stick that fits in the candlestick holder save it as Candle
 a) Make the candlestick with a 30mm diameter.
 b) Taper the bottom of the candlestick utilizing the Chamfer tool (click the arrow below Fillet to select Chamfer)
 c) Make sure you add a wick on the top of the candle (extrude a circle or use the sweep tool)

3. Create a new assembly and assemble the candle with the candlestick holder. Name it Cassembly

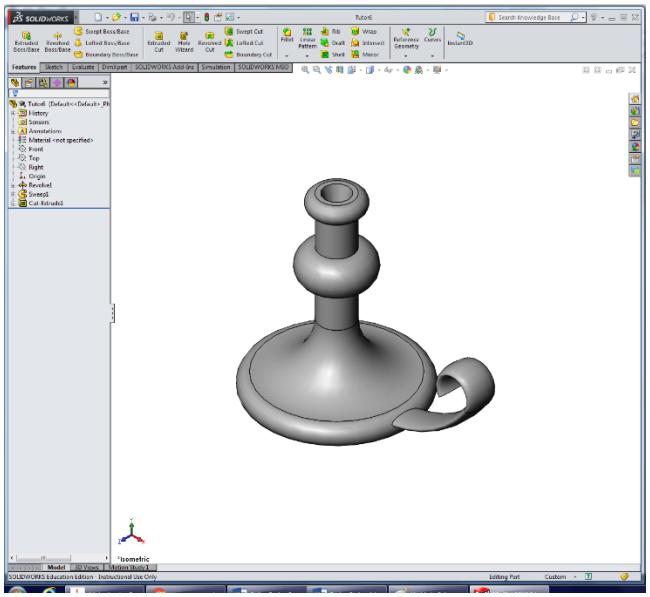

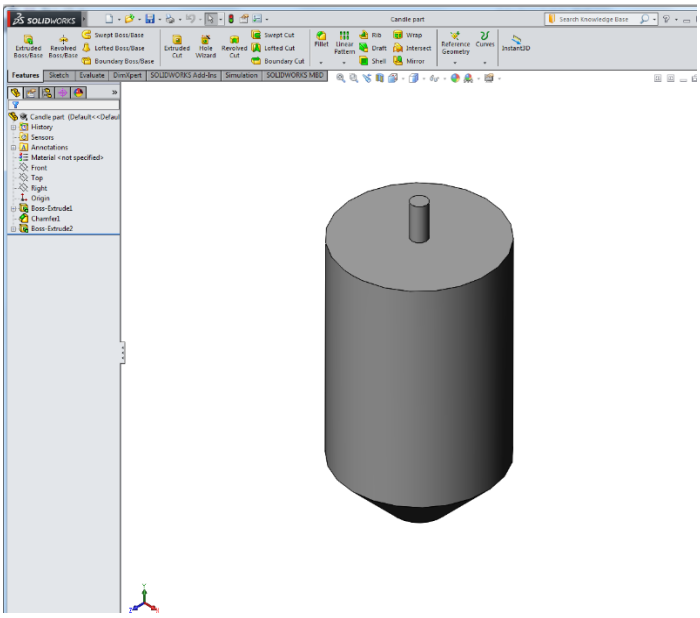
SOLIDWORKS
Candle part
Features
Sketch
Evaluate
DimXpert
SOLIDWORKS Add-Ins
Simulation
SOLIDWORKS MBD
History
Sensors
Annotations
Material <not specified>
Front
Top
Right
Origin
Boss-Extrude1
Chamfer1
Boss-Extrude2

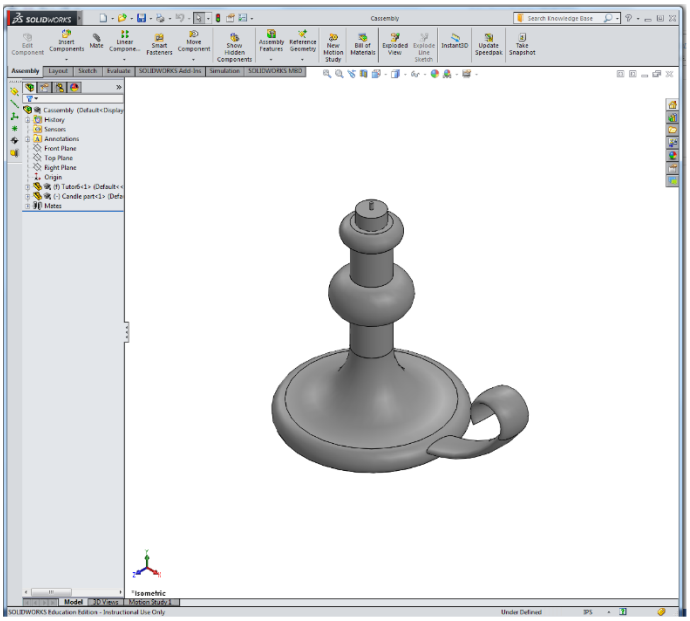
SOLIDWORKS
Assembly
Assembly
Layout
Sketch
Evaluate
SOLIDWORKS Add-Ins
Simulation
SOLIDWORKS MBD
History
Sensors
Annotations
Front Plane
Top Plane
Right Plane
Origin
Mates
*Isometric
Model
3D Views
Motion Study 1
SOLIDWORKS Education Edition - Instructional Use Only
Under Defined

Session 7
Lofts

Overview:
Procedures of lofting and creating offset planes will be introduced and implemented.
Tasks:
1) Complete Tutorial - Lofts
2) Create a bottle with the following dimensions:
Use 3 Offset planes and 3 SEPARATE Lofts to create the bottle.

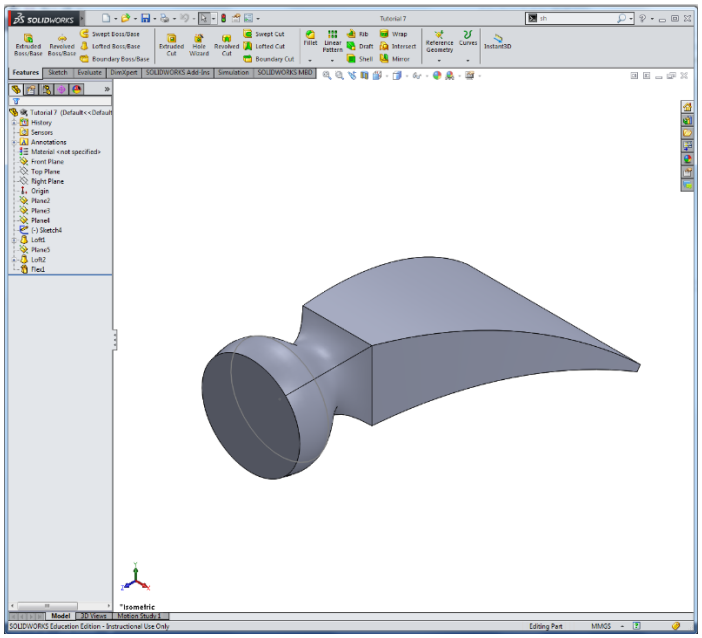

Session 8
Assembly Mates

Overview:
Advanced assembly techniques will be introduced in this tutorial.
Tasks:
Complete Tutorial - Assembly Mates

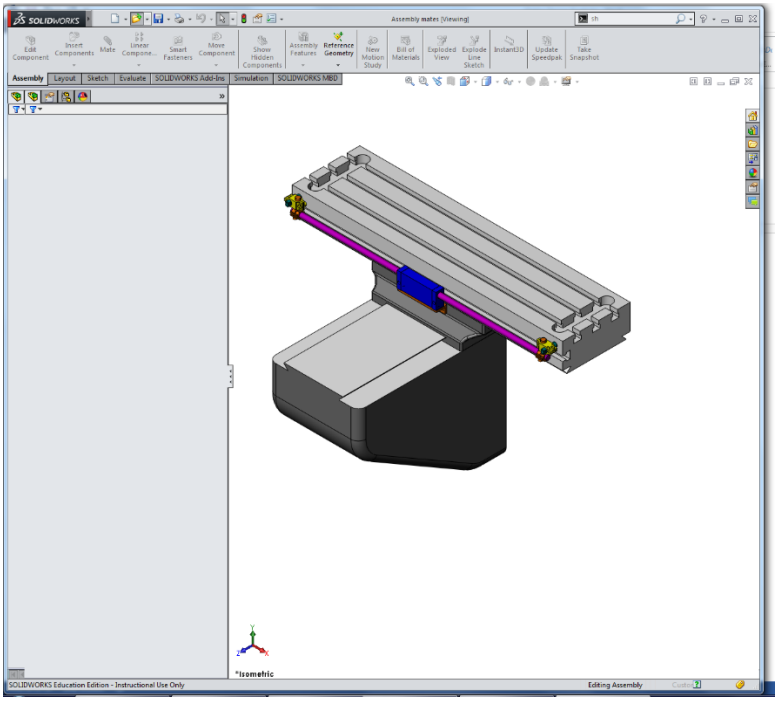

CAD Project: Entertainment Center

Design an entertainment center for a contemporary house, subject to the following specifications:

- Is shipped in a box of compact size.
- Is assembled easily.

• Easy to move around.
• Is stable against tipping in normal use.
• Provides minimum compartments for a 36" TV, digital box, amplifier, and center speaker, etc.
• Is aesthetically pleasing to the eyes.

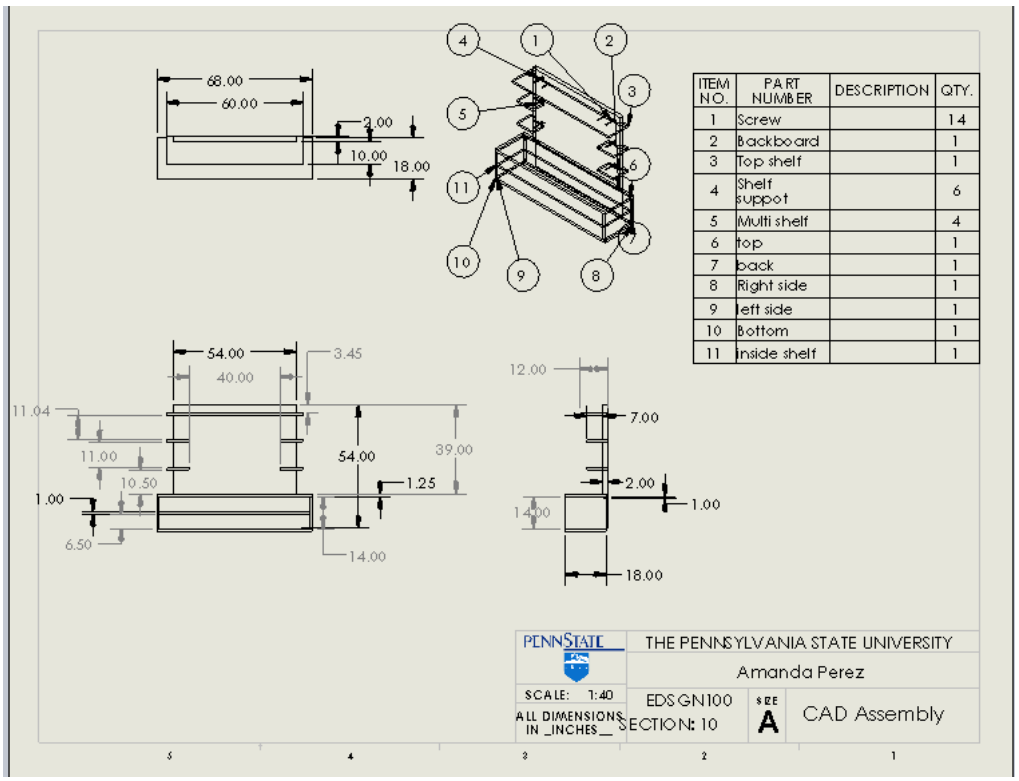

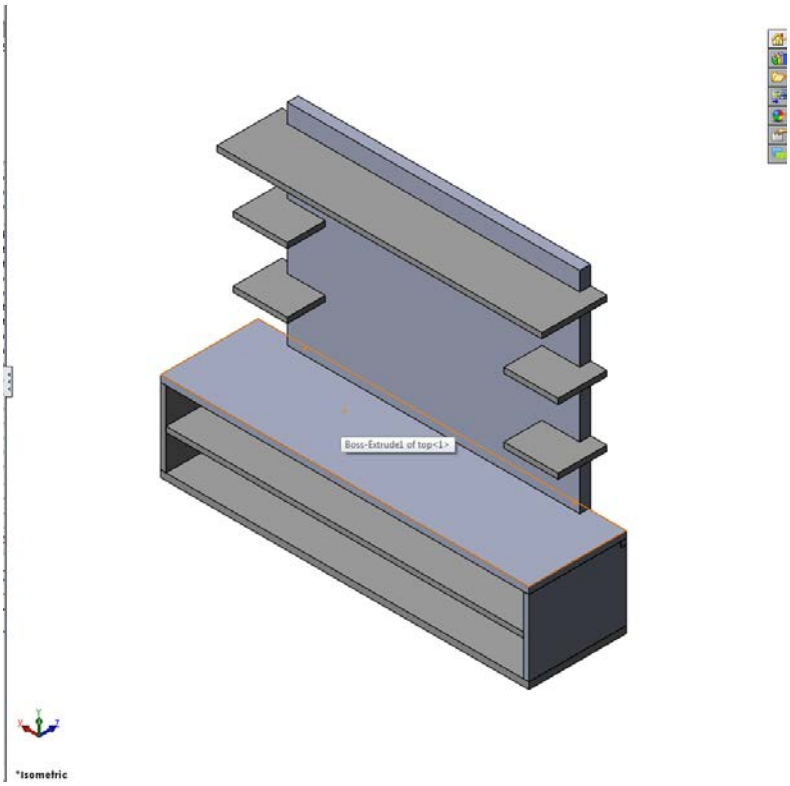
Boss-Extrude1 of top<1>
*Isometric

EDSGN 100 Introduction to Engineering Design

Design Project #1: Dumpling Maker

Design Task:

Design and build a prototype of a dumpling maker suitable for use in either a household or a restaurant (backgrounds and some other details will be explained in class).

Design Specifications:

- The dumpling maker should be automatic or semi-automatic.
- The dumpling maker should produce no less than 10 dumplings per minute on average.
- The material cost for the dumpling maker should not exceed $200 unless it can be justified.
- The dumpling maker should be safe as a food processor, easy to maintain, safe to use, and dishwasher safe.

Key Deliverables:

A lab report to be published on the web with the following items included (Note: Guidelines for the lab report will be given later):

1. Problem statement
2. Mission statement
3. Customer needs assessment
4. Gantt chart
5. Design approach (concept generation and concept selection with design matrix)
6. Working drawing
7. Prototype (images, scale, operation instruction, etc.)
8. Working mechanism and engineering analysis
9. Cost analysis
10. Conclusion
11. References (if any)
12. Acknowledgement (if any)

Evaluation Criteria:

- Design meets specifications
- Creativity/Innovation
- Working mechanism and operation instruction are clear
- Ease of operation
- Safe to use

- Cost efficient

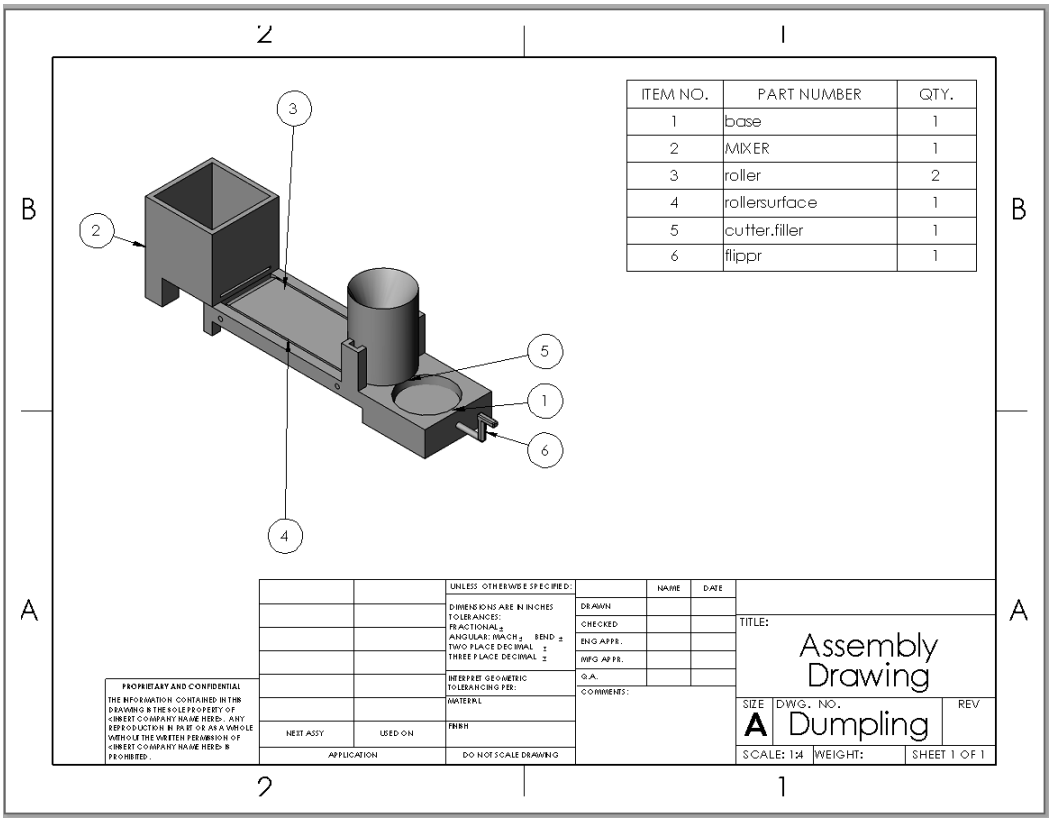

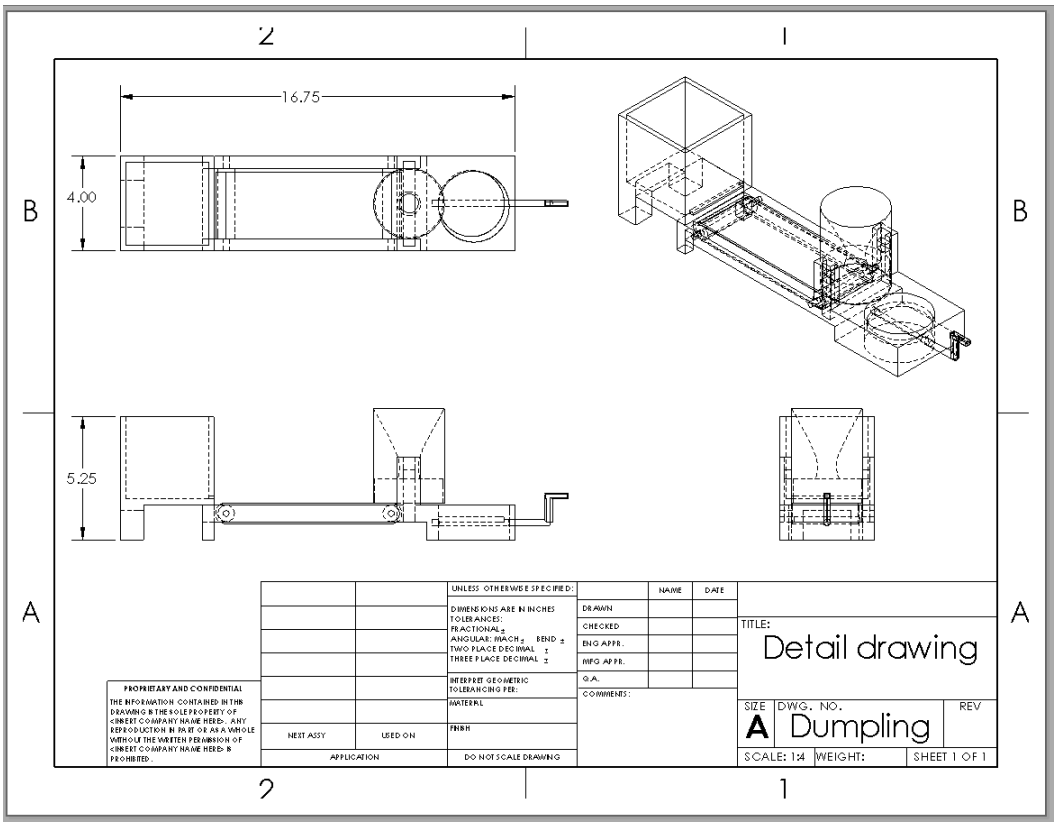

Design features

Design features of the Dumpling-a-maker 3000 include a detachable mixer with interchangeable nozzles and a dumpling creaser sizer option. With the detachable mixer, the consumer is able to easily separate the mixer from the body of the dumpling, making it easier for cleaning. The interchangeable nozzles allow the user to choose their desired width or thickness of the dough. The mixer may also be used independently from the Dumpling-a-maker 3000 for other recipes that require the mixing and flattening of dough. The sizer options for the dumpling creaser vary from 1”, 2” and 3” in diameter. This feature allows the consumer to make small to large dumplings.

Design Project II

GE: Freight, Fuel, & Emissions

Statement of Work

EDSGN 100: Intro. to Engineering Design

Fall 2015 Client-Driven Design Project

Penn State

Project Objective

Pittsadelphia is looking for the design of a cost-effective freight shipping system that reduces smog and meets EPA requirements, while maintaining or increasing freight capacity into and out of this important port city.

Project background

Every day into and out of the port city of Pittsadelphia, approx. 165,000 tons of freight or minerals (coal, etc.) per day travel via rail. Smog from locomotive emissions is a key complaint of city residents. Smog is generated from engine-emitted NOx. Tier 2 locomotives used to haul freight are approaching age for overhaul, at which time investments will be required to meet EPA Tier 3 (or higher) requirements.

Suggestions have been made to address locomotive emissions (i.e., smog) by

1) Upgrade the locomotive fleet to meet more recent emissions guidelines set by the EPA.

A few options may exist to meet the new guidelines:

- Sell existing fleet and purchase new locomotives
- Upgrade fleet with exhaust after-treatment hardware
- Utilize alternate fuels (Biodiesel, CNG, LNG, etc.) which may produce less NOx

2) Alternate freight shipping methods:

- By water
- By air
- By ground, i.e., trucking

Sponsor Background

GE Transportation, a unit of GE (NYSE: GE), solves the world's toughest transportation challenges. GE Transportation builds equipment that moves the rail, mining, and marine

industries. GE's fuel-efficient and lower-emissions freight and passenger locomotives; diesel engines for rail; marine and stationary power applications; signaling and software solutions; drive systems for mining trucks; and value-added services help customers grow. GE Transportation is headquartered in Chicago, IL, and employs approximately 13,000 employees worldwide.

Project Description

Each design team should research and evaluate the suggestions made for fleet upgrade or alternate shipping methods. For upgrades, consider physical constraints of new hardware, as well as fuel storage requirements. Provide your recommendations, commenting on impact to:

1) Emissions/Regulatory requirements
2) Costs: fuel, infrastructure, etc.
3) Freight throughput/capacity
4) Public opinion
5) On-time delivery

Project Deliverables

- Technical report containing the following elements

  o Rationale for the recommendation
  o Description of alternative concepts and their evaluation
  o Systems diagram
  o Concept of Operations
  o Environmental analysis
  o Assessment of important aspects of your system for feasibility and adoption, including public opinion
  o Economic viability of the system
  o CAD drawings

- Model or prototype of a component of the overall system

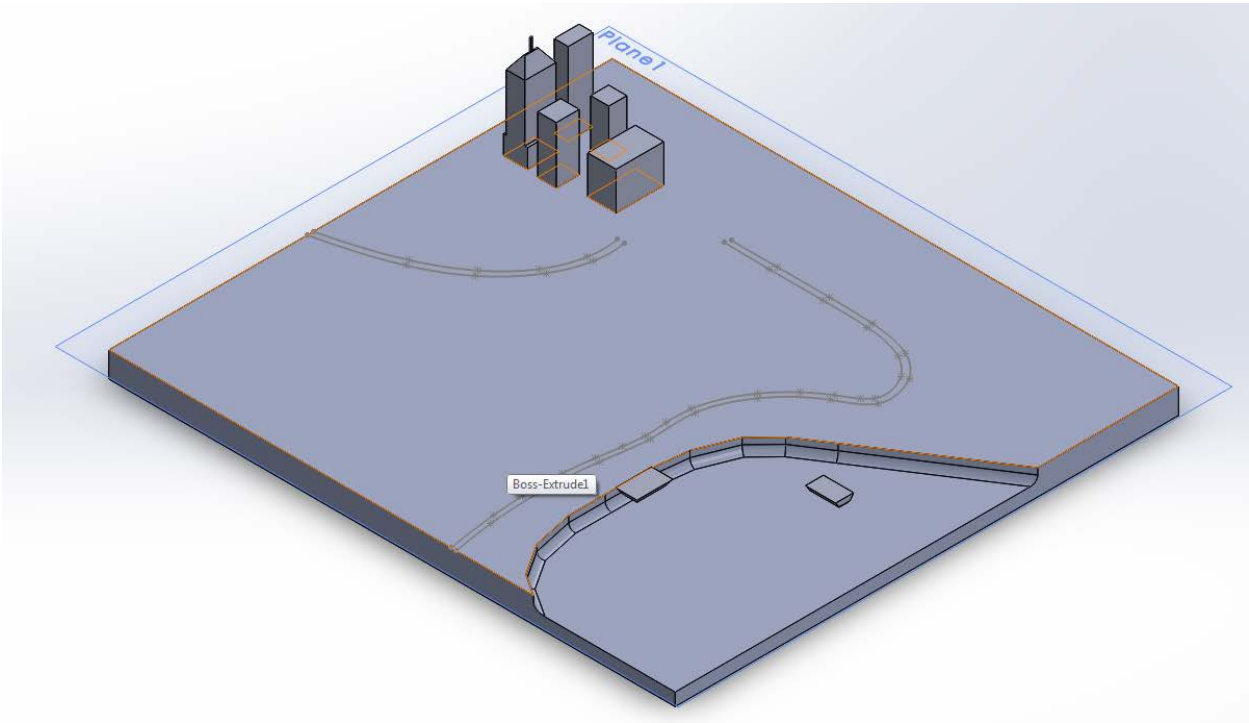

Design Features:

The best design, which was chosen, is the ships and trains system. This system involves selling half, 25, of the existing 50 locomotive fleet. The remaining are upgraded to tier 3 and given after-treatment. The 25 upgraded locomotives carry all 60,000 tons of the coal and 28000 tons of the freight. The remaining 77000 tons of freight are carried by cargo ships loaded and unloaded at the already extant Pittsedelphia shipyard.

In this system, the number and size of the cargo ship is variable, and is taken as such in the cost and emission calculations done for these ships.

System Supporting Numbers:
Daily NO_x emissions by ship-843 kg
Daily NO_x tier 4 emissions for 77000 tons carried-1287 kg
Daily fuel cost of ship-$17000
Total daily fuel cost of new system-$298000
Daily fuel cost of 45 locomotives-$611000

System features:

- Ships have very long lives and low maintenance costs
- Ships emit much less NO_x and PM than locomotives when carrying the same cargo
- Buying cargo ships and upgrading half of the locomotives cost significantly less than simply purchasing tier 4 locomotives
- This system puts to better use the shipyard of Pittsedelphia, which was evidently not extensively used before
- The money saved by decreased fuel costs can be used to buy new tier 4 locomotives to replace the upgraded tier 3 locomotives, decreasing emissions even further
- Because some freight is still carried by train, the slow delivery time of the ships can mitigated by having time sensitive cargo shipped by train
- The freight taken into the city can be increased by using saved money to expand the shipyard and buy more ships

Summary and conclusions

Design Project I:

After designing many different dumpling maker options, it was concluded that having a functional, reasonably-priced, and time efficient dumpling maker would be of utmost importance for the design task at hand. There were many options for materials, layout, and style. The final design was optimized to have the best of everything possible, all while still meeting the design criteria.

A simple explanation of how this dumpling maker prototype would work can be found on page 8, titled Engineering Analysis. The unit is semi-automatic and time efficient, amongst other things. If it had to be done again, one thing that would have been done differently is the amount of material used in order to make it more space efficient and more cost efficient as well.

Design Project II:

The design specifications laid out for the system are met and exceeded using the combination Ships and Trains system. These specifications included meeting at least tier 3 epa emission standards, shipping 165000 tons of cargo into the city daily, and to reduce smog in the city while maintaining or exceeding the current level of freight.

The emission standard is easily met due to the extremely efficient design of the marine diesel engines used in the cargo ships. This engines emit much less for their size than the engines used in the locomotives. In addition, it takes less horsepower to carry one ton of freight at sea than on the rails, necessitating a smaller engine. These combine to reduce emissions of the system to significantly better than tier 3 epa standards.

The 165000 tons shipped daily is met with this system by having the freight divided to be carried by both the ships and the trains. The ships carry 77000 tons of the freight while the trains carry 28000 tons of freight and all 60000 tons of coal. These numbers can even be exceeded with relative ease by upgrading and expanding the existing shipyard using money saved by the decreased fuel costs of the ships.

Smog is reduced significantly by two factors: the decreased PM emissions by the cargo ships, and the distance between the city itself and the shipyard. The shipyards of most cities are adjacent, but not in the city itself. This means that much of the smog created by the ships would not linger in the city, but be blown away or out to sea. In addition, because the smog is mostly created out to sea, it affects other cities and the land ecosystem less than the smog created by locomotives.

The additions of ships to the shipping infrastructure, even though they carry less than half of the total tonnage, easily allows the design specifications to be met while maintaining relatively low costs. This makes it the ideal solution for the city in both the short and the long term. The lower initial cost will not discourage the city from making the switch, while the decreased daily costs will allow the city to reduce emissions even further in the future, or put the funds to other use.

References

"How to Make Chinese Dumplings." *WikiHow*. N.p., n.d. Web. 10 Dec. 2015. <http://www.wikihow.com/Make-Chinese-Dumplings>.

"Dumpling." *Wikipedia*. Wikimedia Foundation, n.d. Web. 10 Dec. 2015. <https://en.wikipedia.org/wiki/Dumpling>.

"Wholesale Raw Material Suppliers." *HKTDC*. N.p., n.d. Web. 10 Dec. 2015. <http%3A%2F%2Fwholesale-raw-materials-chemical.hktdc.com%2Fmanufacturers%2FWholesale-Raw-Material-Suppliers%2Fen%2F5914-1%2F>.