EDSGN 100: Introduction to Engineering Design
Section 010, Team 2

Dumpling Maker

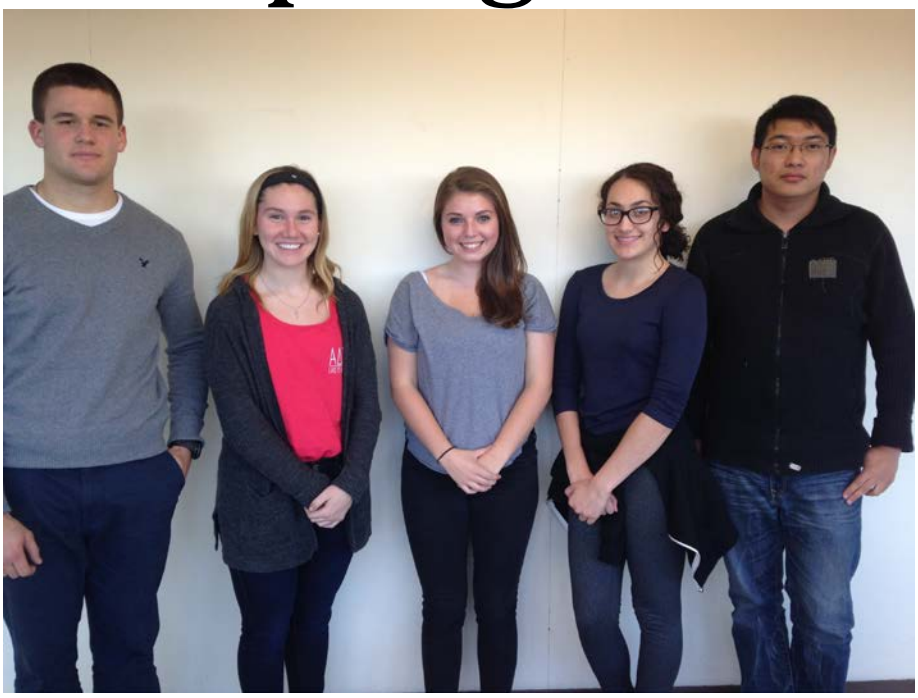

Submitted By:
Andrew Marders, Caroline Rizea, Kelsey Poirier, Amanda Perez, Zibo Liu

Submitted To:
Xinli Wu

Fall 2015

Abstract

Our design excels in speed. The dough comes out of the mixer through a sliver. This sliver contains a knife that cuts the dough into two equal strips so that our machine produces twice the amount of dumplings. The dough is cut into circles and filled with meat, and is then led onto the dumpling flipper where they are flipped. This report shows each aspect involved into the actual design process of the dumpling maker.

Table of Contents

Cover Page…….. i
(Kelsey Porier kbp5168@psu.edu)
Abstract……..... ii
(Caroline Rizea cdr5268@psu.edu)
Table of Contents……..…….. iii
(Andrew Marders awm5913@psu.edu)
Introduction…….....…... 1
(Zibo Liu zol5156@psu.edu)
Description of Design Task……..…….. 2
(Andrew Marders awm5913@psu.edu)
Design Approach……..... 3
(Caroline Rizea cdr5268@psu.edu)
The Final Design and its Prototype…….... 5
(Amanda Perez azp5230@psu.edu)
Engineering Analysis…….. 10
(Zibo Liu zol5156@psu.edu)
Summary and Conclusions…….. 12
(Kelsey Porier kbp5168@psu.edu)
Resources…….....……..…….. 13
(Andrew Marders awm5913@psu.edu)

Introduction

The Dumpling Maker was an idea spawned from the need to innovate and create a reliable Dumpling Maker that meets all of Professor Xinli Wu's requirements. The following pages document this project in its entirety, showing the exact process this group of fine young professionals went through. The project's main goal was to design and build a prototype of a portable dumpling maker. The dumpling maker had to be affordable, easy to put together and take apart, and durable.

Description of Design Task

Problem statement:
Dumplings are very labor intensive to make, and there are no cheap residential alternatives to the large and expensive, industrial sized, automatic dumpling makers.

Mission statement:
The mission was to create an automatic or semi-automatic dumpling maker that produces no less than 10 dumplings per minute (DPM). The dumpling maker did not exceed a material cost of $200.00. The device is also easily maintained, safe to use, safe as a food processer, and dishwasher safe.

Design Specifications:
The design excels in speed. The dough comes out of the mixer through a sliver. This sliver contains a knife that cuts the dough into two equal strips so that the machine produces twice the amount of dumplings. The dough is cut into circles and filled with meat, and is then led onto the dumpling flipper where they are flipped.

Design Approach

Table 1. Gantt chart

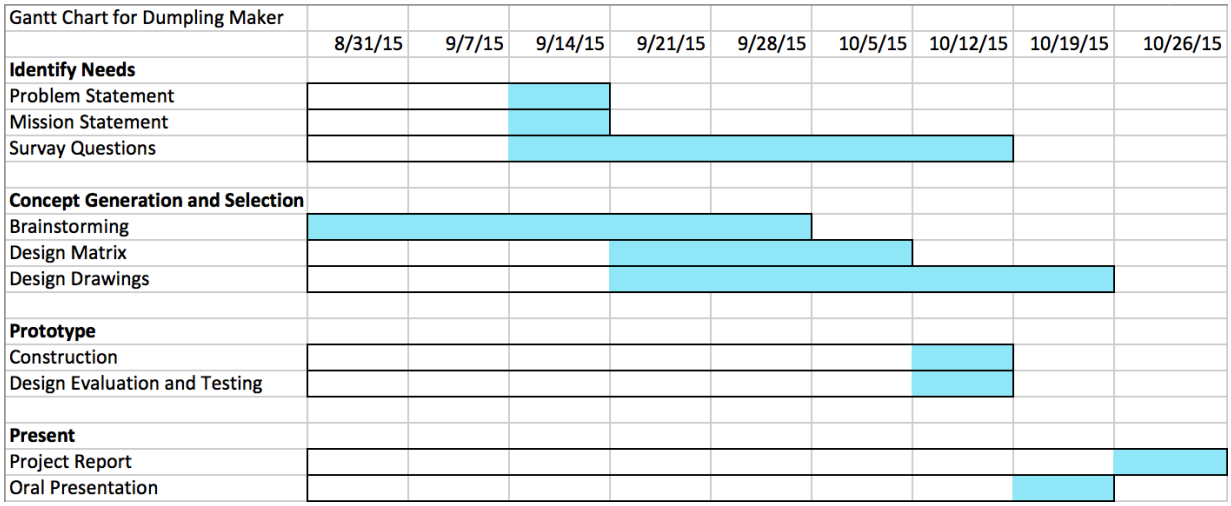

Customer needs assessment

- **How much room do you have in the kitchen to store a dumpling maker?** - We have minimal space in our kitchen because our restaurant is not very large.
- **How often do people order dumplings and how many dumplings are in a typical order?** - We usually have dumplings ordered with every other order placed, they are very popular. Most groups of people ordering the dumplings order at least two servings for the table. Each dumpling order comes with six dumplings
- **How much would you be willing to spend on a dumpling maker? /Do you even need a dumpling maker?** - No more than $30.
- **What safety precautions do you take while making your dumplings?** - Our machines are safe to use. The only danger we look of for is to make sure we don't cut our fingers, but that is the same safety precaution we use while handing a knife, there is no difference.
- **What is the typical size of the dumpling you make?** - Around three to three and a half inches. We use extra filling so the dough must be larger to fit it all inside.
- **Would you prefer an automatic or semi-automatic?** - Automatic would be nice, but our business is not too popular, so a semi-automatic dumpling maker would not waste time.

Table 2. Design Matrix

Selection Criteria	A	B	Reference(C)	D	E
Portability	–	+	0	–	
Ease of Handling	+	+	0	+	+
Ease of Use	0	+	0	0	+
Durability	0	0	0	0	0
Speed	–	+	0	+	+
Price	+	–	0	–	0
Sum of +'s	1	4	0	2	3
Sum of 0's	3	1	5	2	2
Sum of -"s	2	1	0	2	1
Net Score	-1	3	0	0	2
Rank	4	2	3	3	2
Continue?	Yes	No	Yes	No	Yes

		A	B	C Reference	D	E	
Selection Criteria	**Weight**	**Rating**	**Weighted Score**	**Rating**	**Weighted Score**	**Rating**	**Weighted Score**
Portability	25%	5	2	3	0.75	2	0.6
Ease of Handling	12%	4	0.48	3	0.36	3	0.36
Ease of Use	40%	4	1.6	3	1.2	3	1.2
Durability	3%	5	0.15	3	0.09	5	0.15
Speed	5%	4	0.2	3	0.15	4	0.2
Price	15%	2	0.3	3	0.45	2	0.3
Total Score			4.73		3		2.71
Rank		1		2		3	
Continue?		Develop		No		No	

The Final design and its Prototype

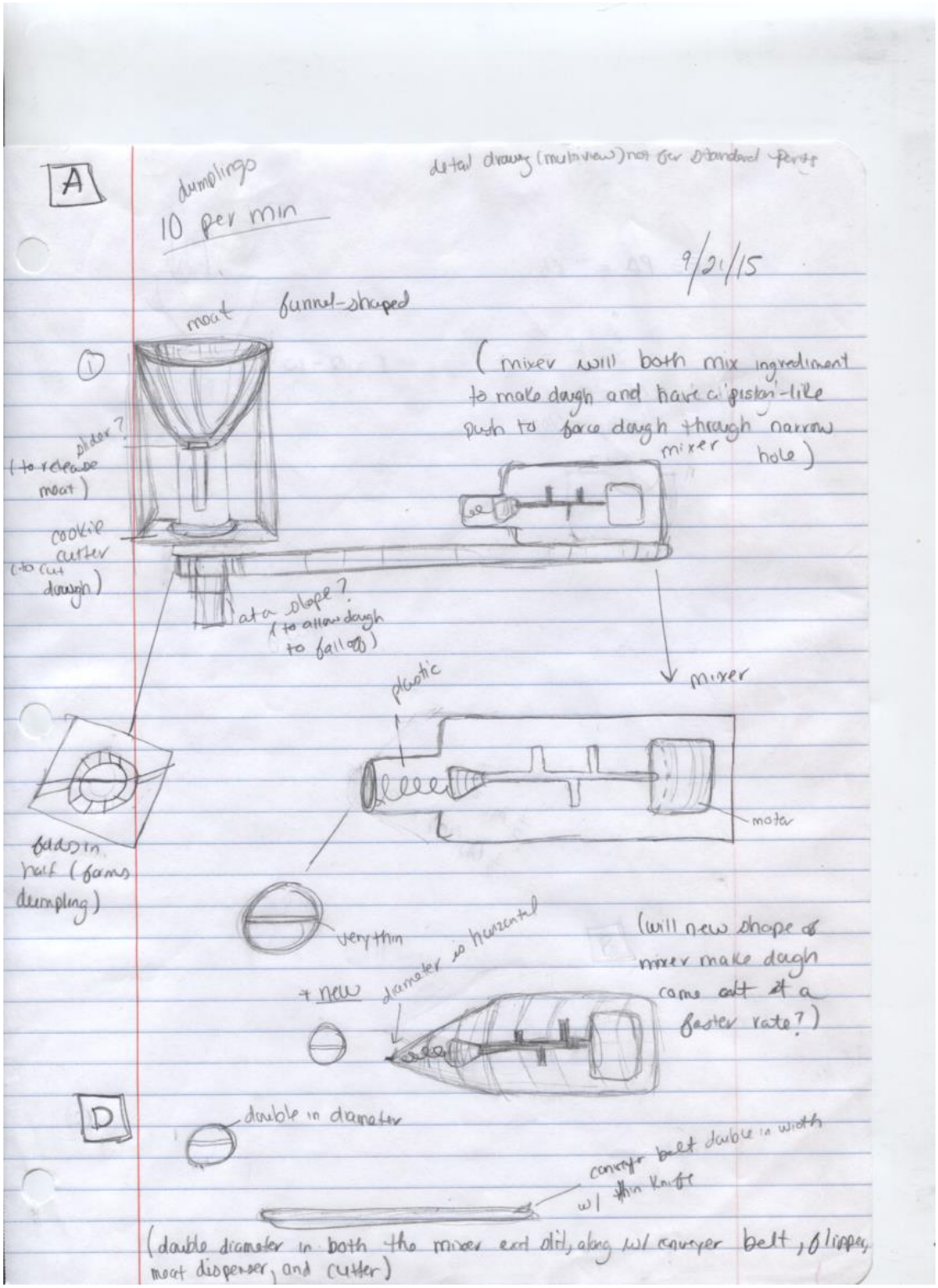

FIG. 1 Design A

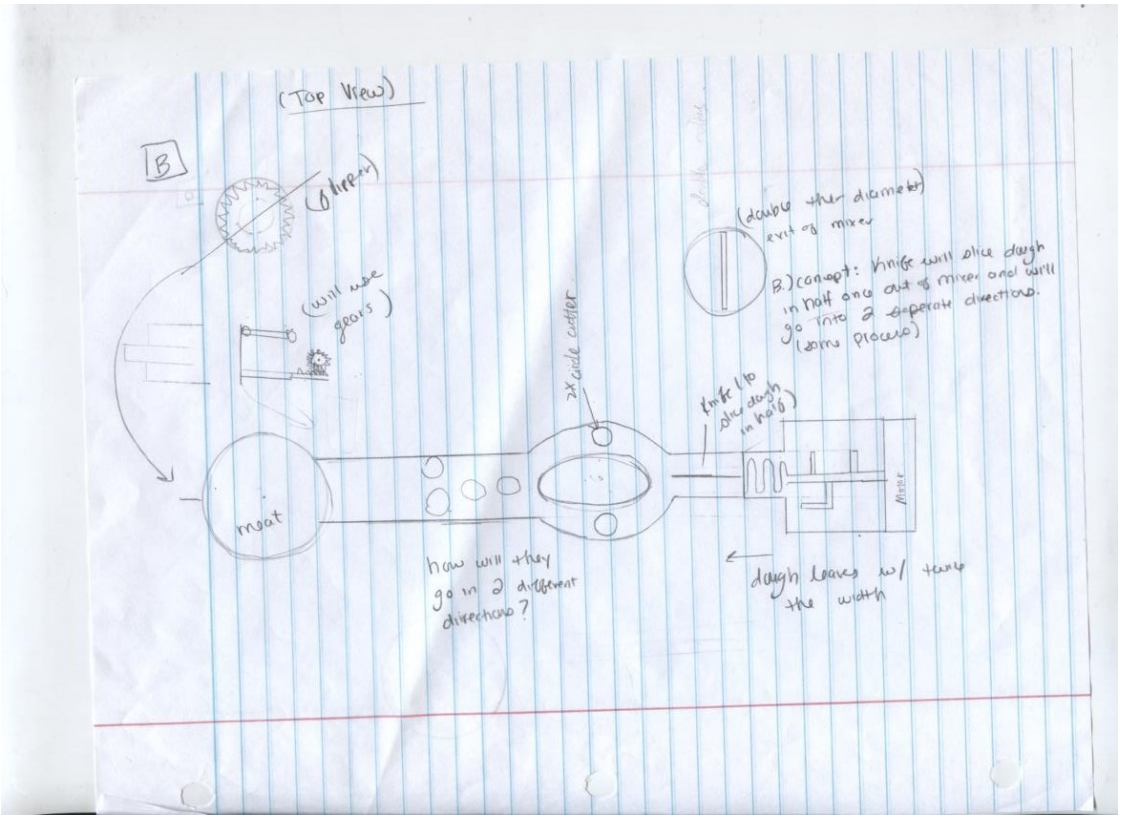

FIG. 2 Design B

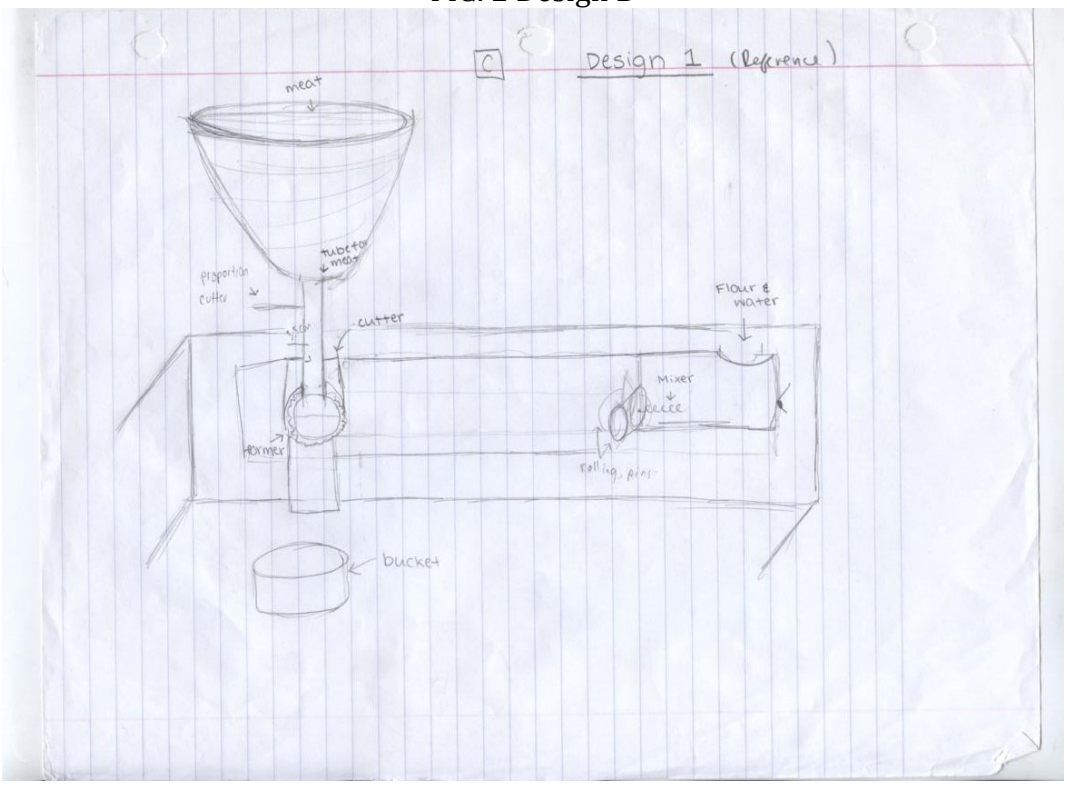

FIG. 3 Design C

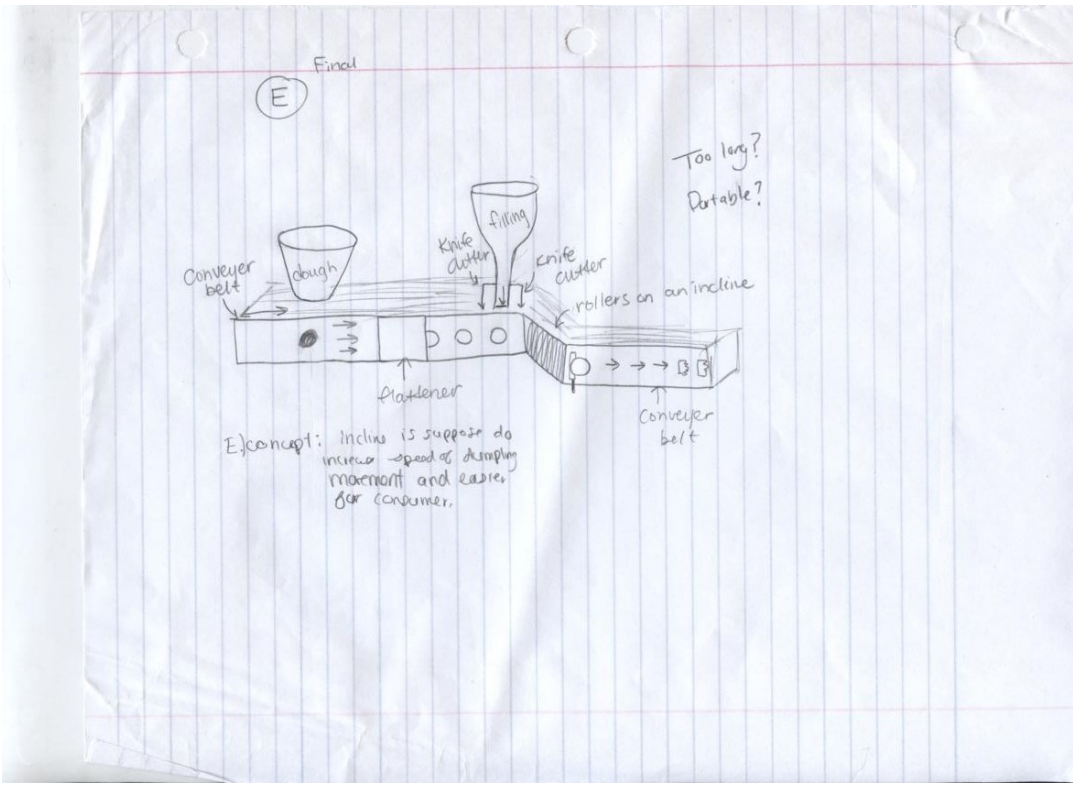

FIG. 4 Design D

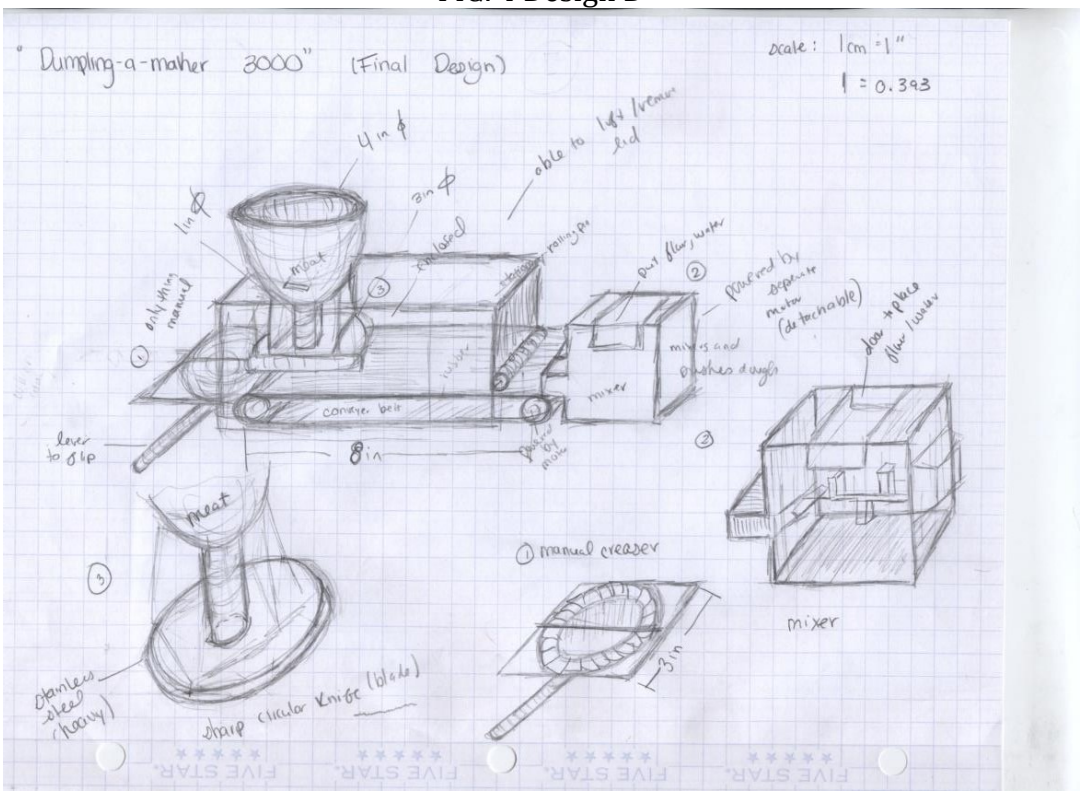

FIG. 5 Design E

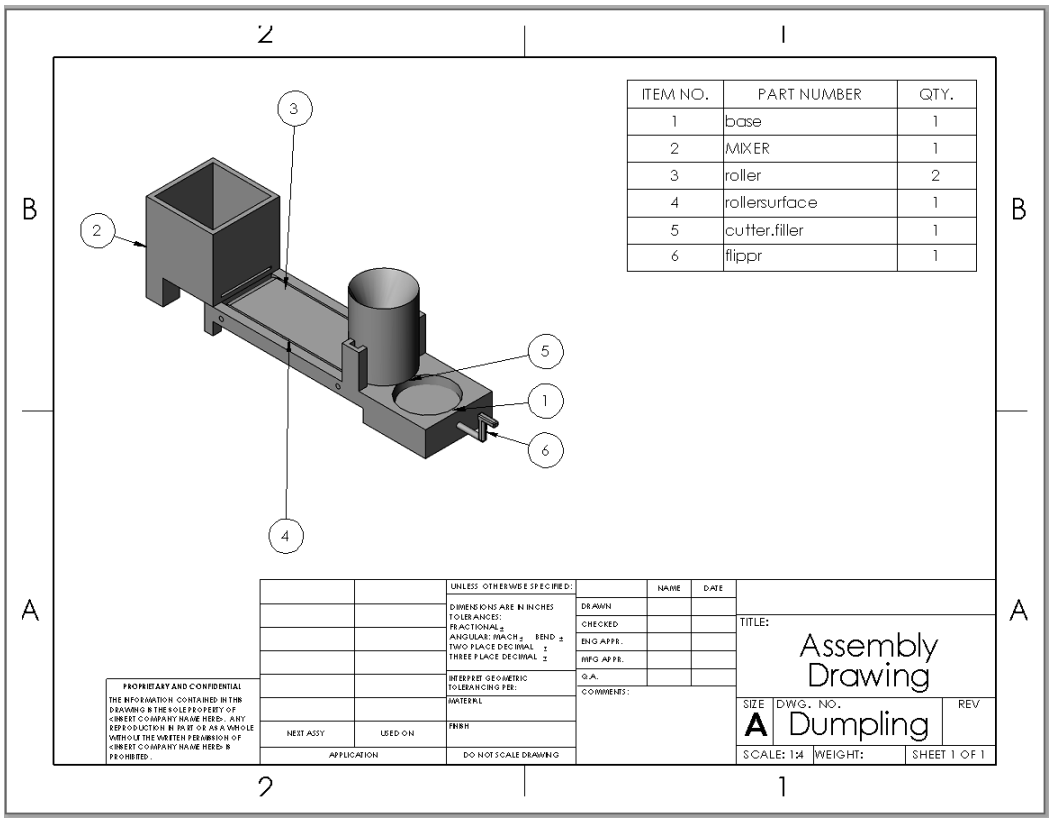

FIG.6 Design A- Final Assembly

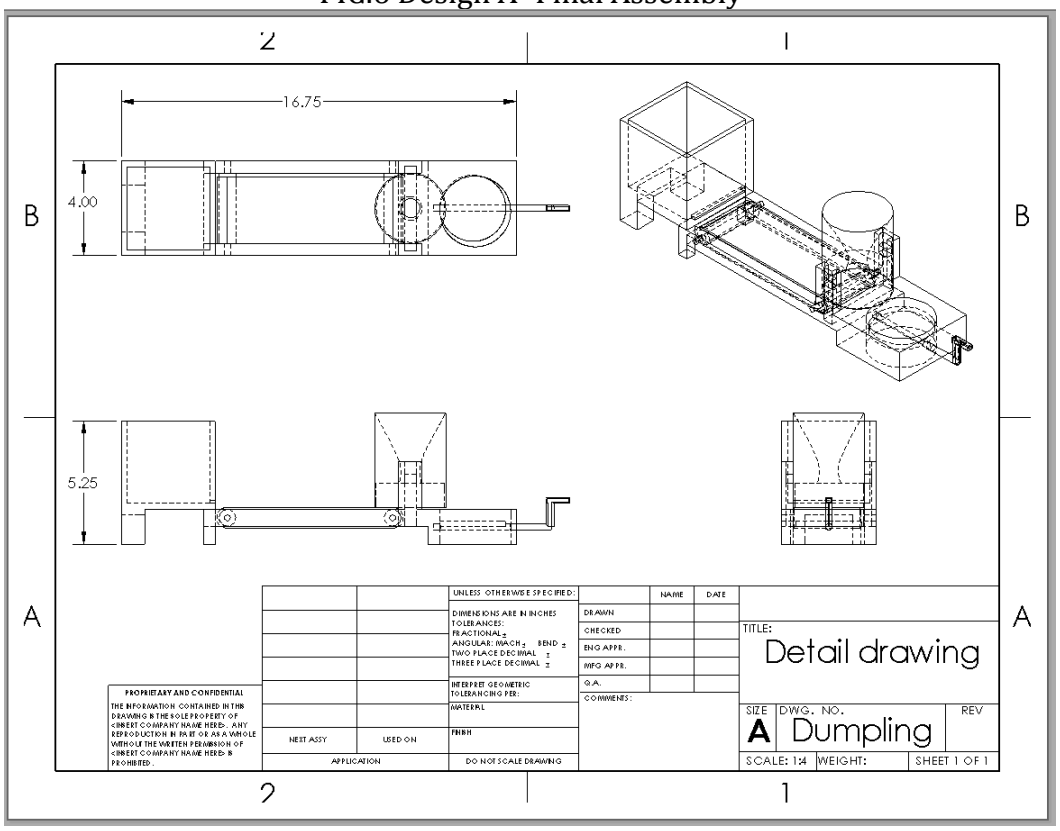

FIG.7 Design A- Final Detail

FIG. 8 Image of Prototype

FIG. 9 Image of Prototype

Design features

Design features of the Dumpling-a-maker 3000 include a detachable mixer with interchangeable nozzles and a dumpling creaser sizer option. With the detachable mixer, the consumer is able to easily separate the mixer from the body of the dumpling, making it easier for cleaning. The interchangeable nozzles allow the user to choose their desired width or thickness of the dough. The mixer may also be used independently from the Dumpling-a-maker 3000 for other recipes that require the

mixing and flattening of dough. The sizer options for the dumpling creaser vary from 1", 2" and 3" in diameter. This feature allows the consumer to make small to large dumplings.

Operation Instructions:

1. Choose desired width of mixer nozzle along with size of dumpling creaser.
2. Open top of mixer and place desired about of flour and dough into mixer (do not overfill mixer).
3. Turn "On" switch on mixer.
4. Fill funnel with pre-made dumpling filling of choice.
5. Once dough is mixed to desired texture, start conveyer belt and cutter by turning dial to desired speed (rpm) located on side near dumpling creaser.
6. Once the dough exits the mixer and is filled with desired filling, the conveyor belt will place dough on creaser. Fold dumpling creaser in half using lever and remove dumpling.
7. Repeat step 6 until desired amount of dumplings are made.

Engineering Analysis

Working Mechanism:
The internal mechanisms of the Dumping Maker Express first flatten the dough, through an automatic mixer and come out a thin shape, where it then goes through fixed roller and is being moved by the conveyor belt. It then uses specially designed rollers to cut out perfect circle dumpling shapes, while removing excess dough on the custom designed conveyor belt. The conveyor belt is perfectly in tune with the dough and filling stations, using infrared sensors to detect the position of the dough and dispense the filling directly into the center of the dough. The filling is dispensed by an aperture that opens when the dough is in position. The dough then falls into a dumpling folder, which folds the dough with desired filling in half (this is done manually). The machine is able to repeat this cycle up to every 2 seconds as long as there is a constant supply of dough and filling.

Table 3. Cost Analysis

Item	Cost	Quantity	Total
Rollers	$4.20	4	$16.80
Conveyor Belt	$34.60	1	$34.60
Mixer	$12.45	1	$12.45
Funnels (Stainless Steel)	$14.95	1	$14.95
Timing System	$78.38	1	$78.38
Outside Shell (Aluminum)	$13.75	1	$13.75
Circle Cutter	$9.38	1	$9.38
Folding Mechanism	$22.68	1	$22.68

Total Cost of Automatic Dumpling maker and mixer comes out to be $202.99. This total price for the product will drop once it goes into mass production. Also, the price of the timing system will also drop on top of being mass produced because a company such as Global Timing Solutions can be endorsed with the dumpling maker.

Summary and Conclusions

After designing many different dumpling maker options, it was concluded that having a functional, reasonably-priced, and time efficient dumpling maker would be of utmost importance for the design task at hand. There were many options for materials, layout, and style. The final design was optimized to have the best of everything possible, all while still meeting the design criteria.

A simple explanation of how this dumpling maker prototype would work can be found on page 8, titled Engineering Analysis. The unit is semi-automatic and time efficient, amongst other things. If it had to be done again, one thing that would have been done differently is the amount of material used in order to make it more space efficient and more cost efficient as well.

References

"How to Make Chinese Dumplings." *WikiHow*. N.p., n.d. Web. 10 Dec. 2015. <http://www.wikihow.com/Make-Chinese-Dumplings>.

"Dumpling." *Wikipedia*. Wikimedia Foundation, n.d. Web. 10 Dec. 2015. <https://en.wikipedia.org/wiki/Dumpling>.

"Wholesale Raw Material Suppliers." *HKTDC*. N.p., n.d. Web. 10 Dec. 2015. <http%3A%2F%2Fwholesale-raw-materials-chemical.hktdc.com%2Fmanufacturers%2FWholesale-Raw-Material-Suppliers%2Fen%2F5914-1%2F>.