CAD LAB

1. SOLID MODELLING

- Solid Modelling is defined as consistent set of principles for mathematical and computer modeling of three-dimensional solids.
- Product design related applications of solid modeling are classified as:
    1) Geometric design,
    2) Analysis and simulation,
    3) Dynamic analysis,
    4) Planning and generation .

Extrusion

- Extrusion is a sketched feature. It requires sketching a 2D profile on a plane and then extruding the sketch perpendicular to the plane.
- When it is the first feature completed, a feature is called the “base feature”.
- Base feature forms the work piece to which other features are added. Several extruded features can be added to the base.
- Extrude boss (build) feature adds material to the part (previous example).
- Extrude cut feature removes material from the part.
- Both extrude boss and cut features need 2D sketched profiles and must be attached to the rest of the part.

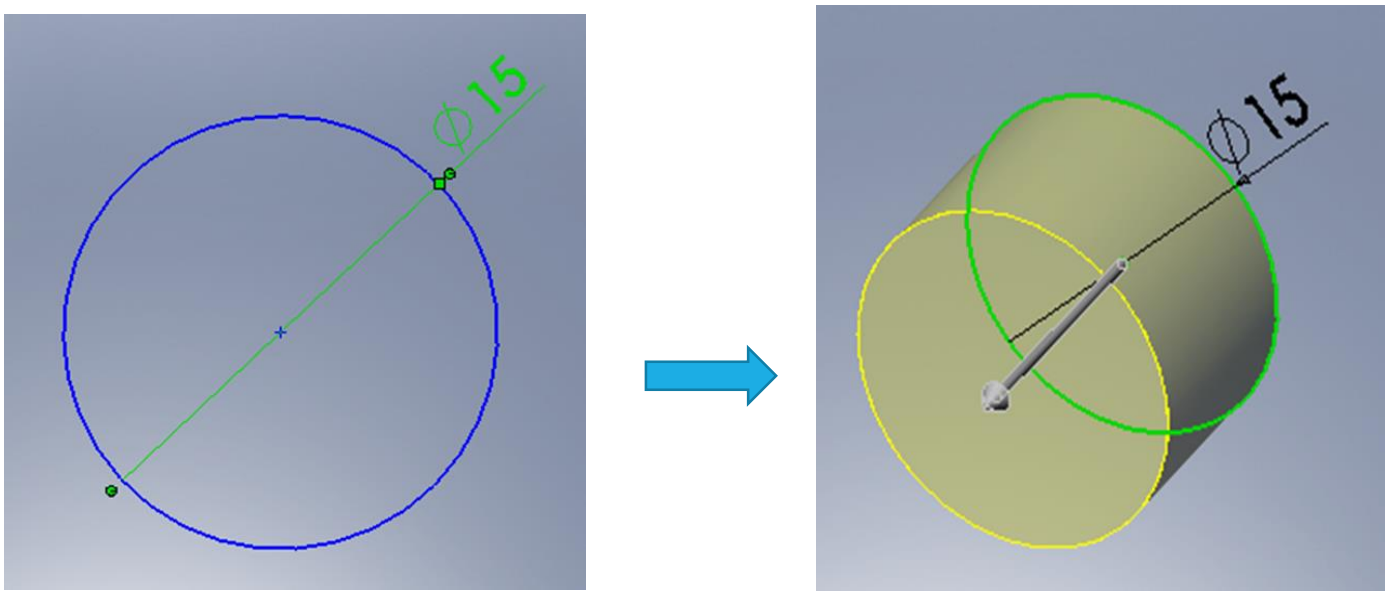

Shell

- Shell is an operation feature, which removes material from the selected face.
- Creates a hollow interior for the selected solid. Shell feature requires specifying the wall thickness.

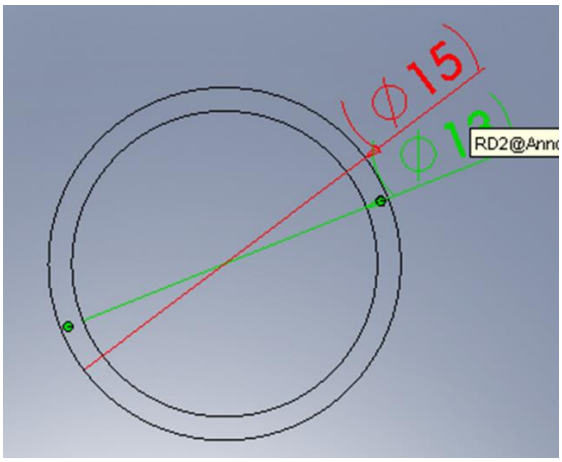

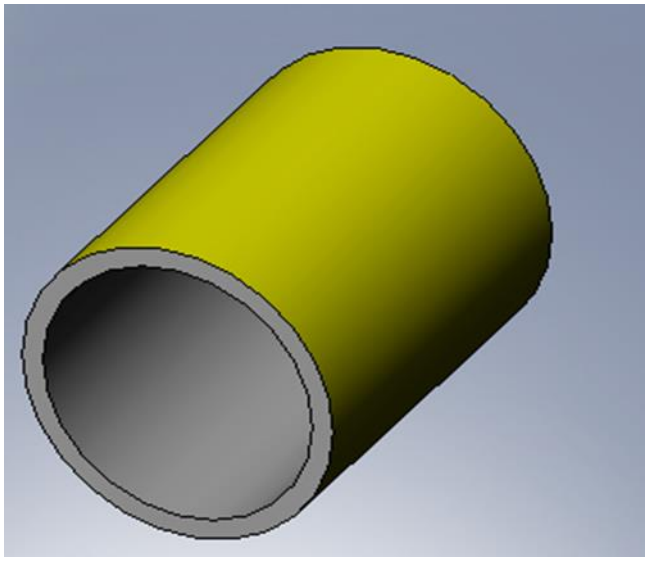

Fillet

- Fillet is an operation feature.
- Used to round sharp edges and faces of a part.
- It can remove or add material.
- Convex fillet - applied for an outside edge and it removes material;
- Concave fillet - applied for an inside edge and adds material.
- Fillet feature requires specifying a radius. For the coffee cup a radius of 0.1 in is used.

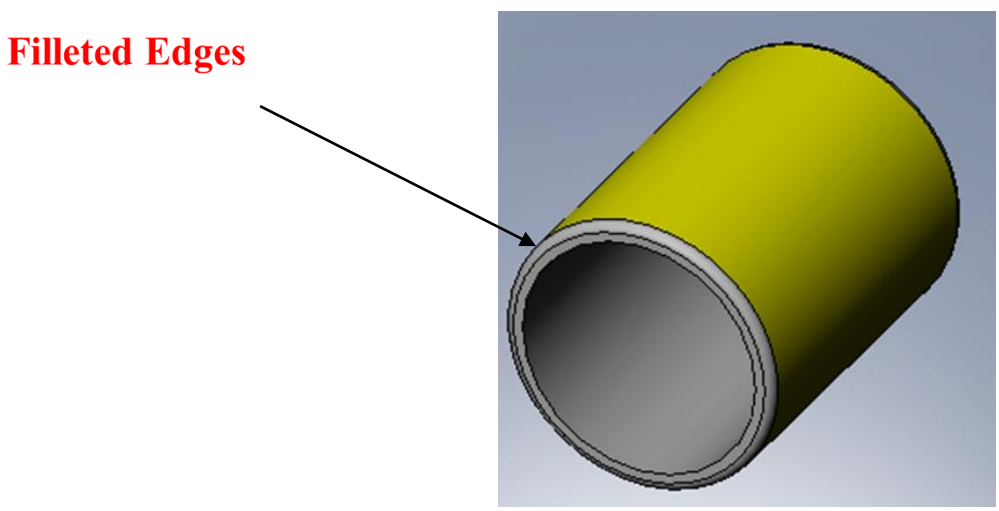

Loft

- Loft feature blends multiple profiles.
- A loft feature can be a base, boss or a cut.
- To create the loft feature,
    1. Create multiple planes required for the profile sketches.
    2. Then, a sketch should be completed on each plane.

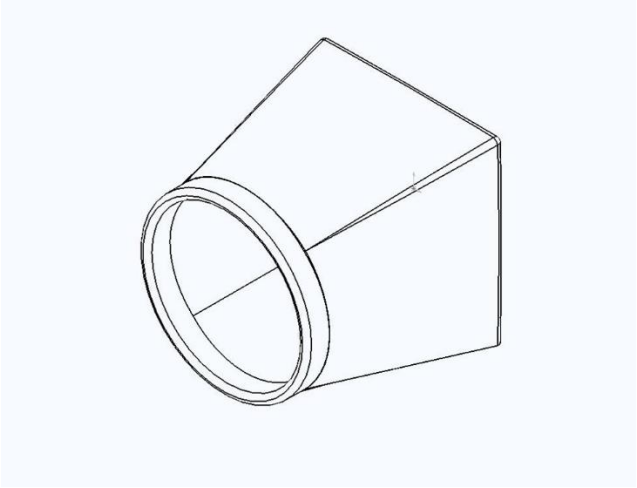

REVOLVE

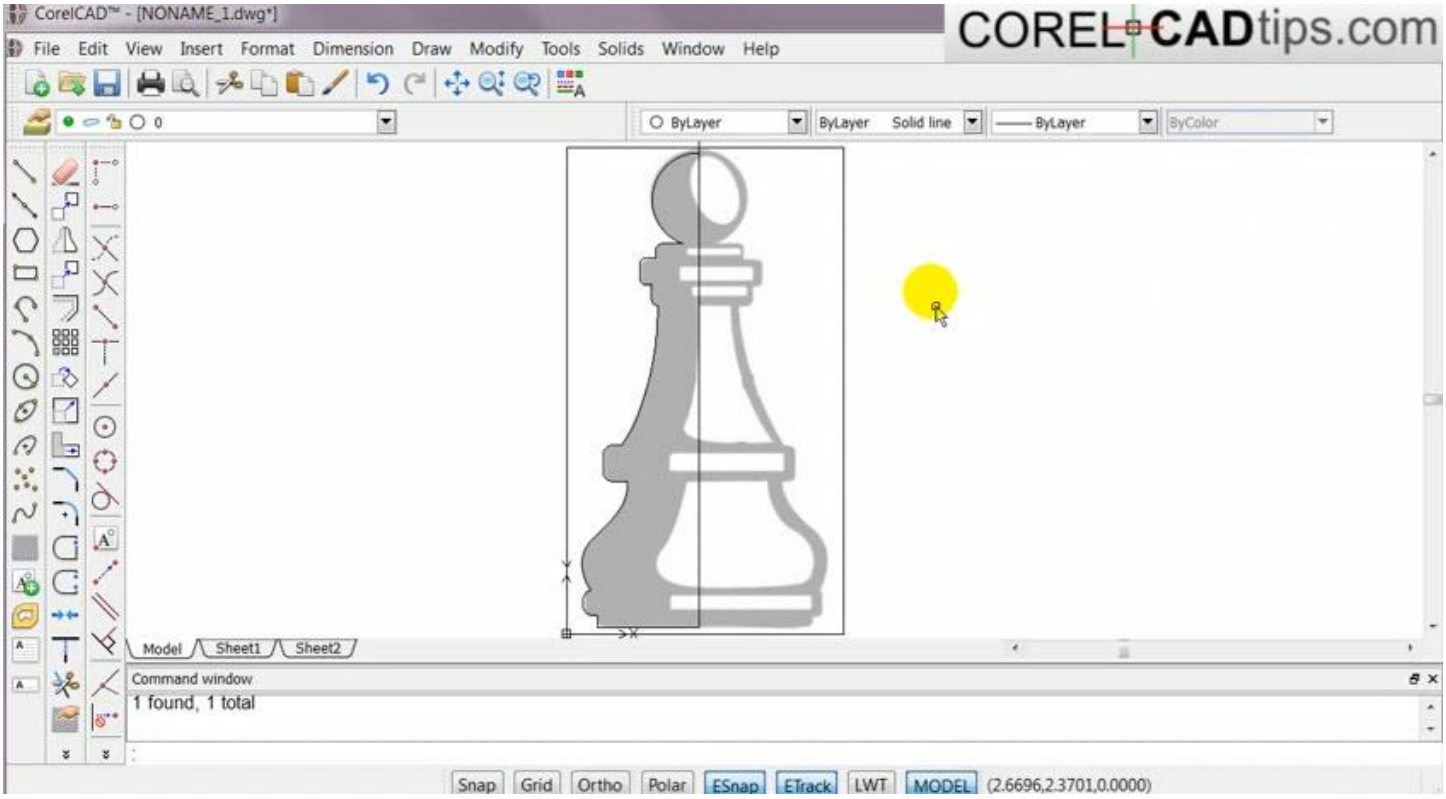
CorelCAD™ - [NONAME_1.dwg*]
COREL CADtips.com
File Edit View Insert Format Dimension Draw Modify Tools Solids Window Help
ByLayer
ByLayer Solid line
ByLayer
ByColor
Model Sheet1 Sheet2
Command window
1 found, 1 total
Snap Grid Ortho Polar ESnap ETrack LWT MODEL (2.6696,2.3701,0.0000)

ASSEMBLY

In assembly , all the parts are assembled by different components like mate , move , etc.

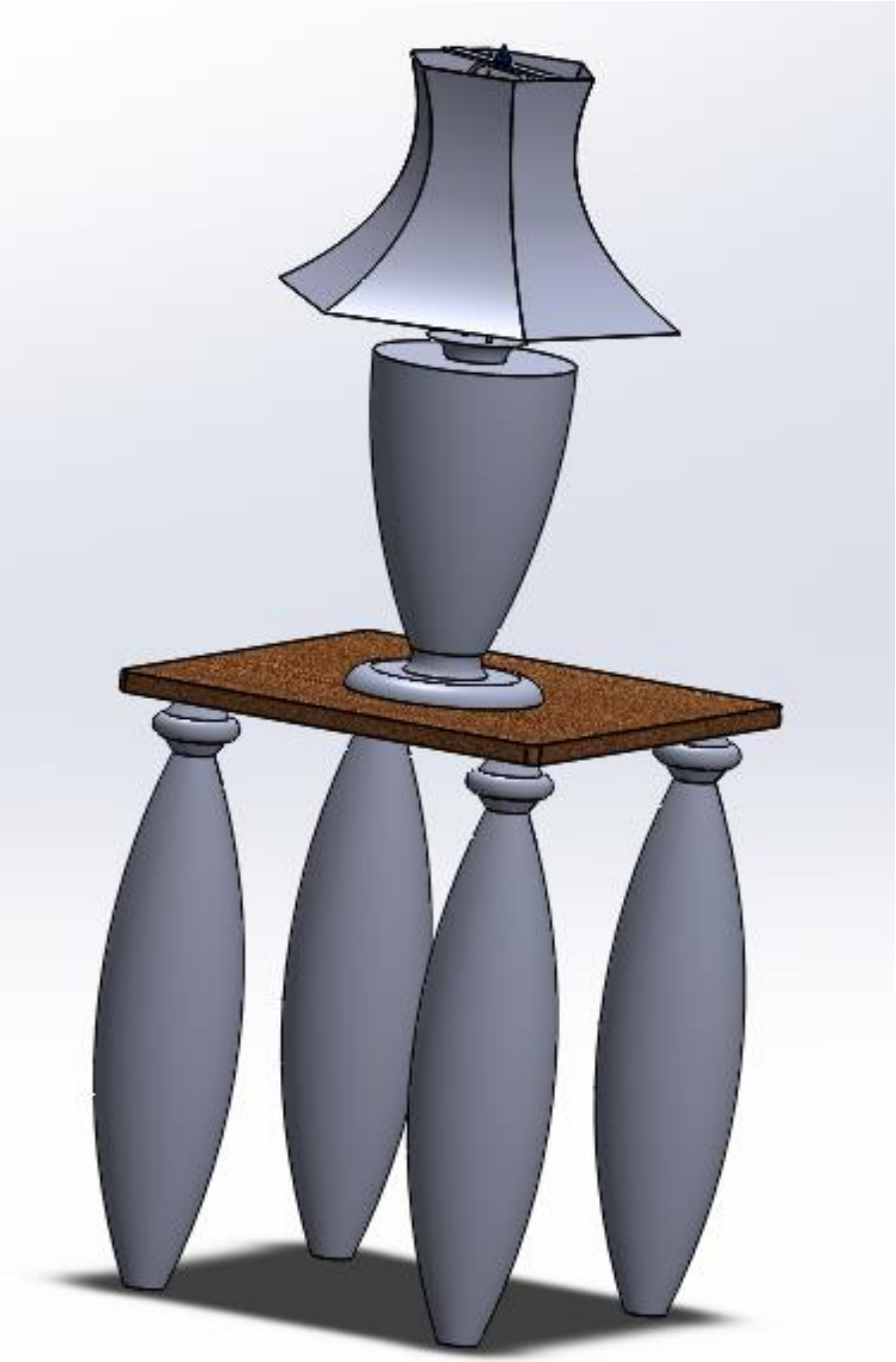

2.CAD FINAL PROJECT
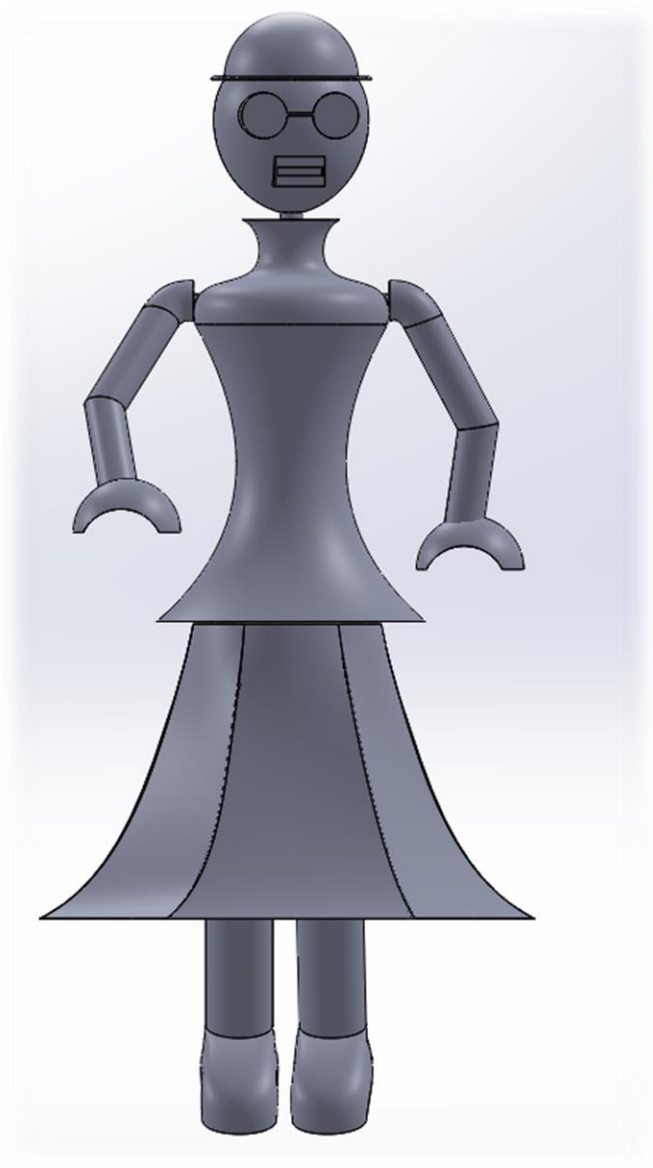
In my CAD final project I made a working model of a female robot . The robot is made from 6 different parts and joined together by different mates .