# Zero Energy Home

By: **Wolves of E-Design**

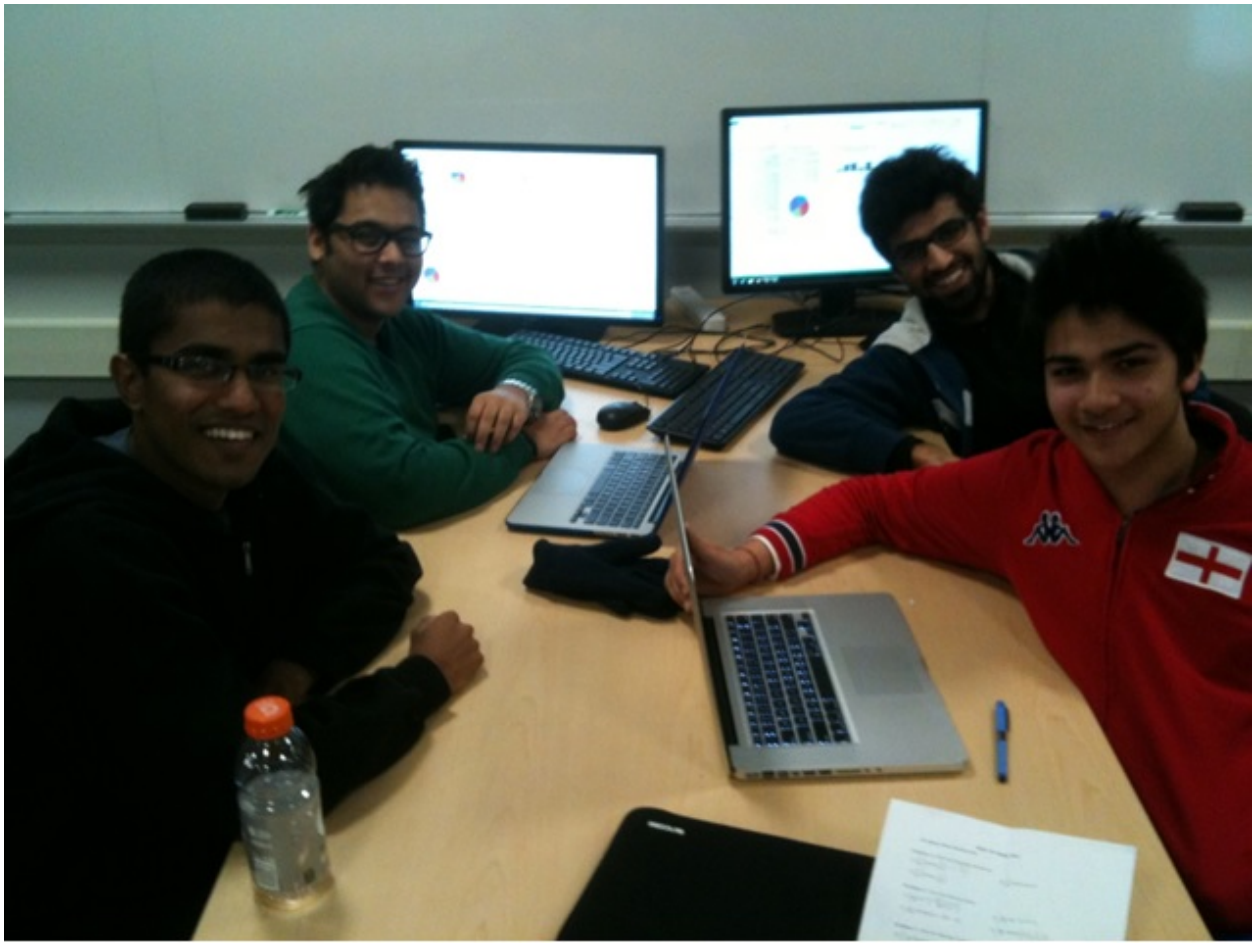

Featuring:

**Aakash Sondhi**
**Sahil Bhatia**
**Raghav Gupta**
**Shaun Vadekath**

# INDEX

1. Abstract
2. Introduction
3. Mission Statement
4. City/Location
5. Previously built ZEH
6. Need Statements
7. Needs/Metric Matrice
8. A Quick Review of Existing Structures
9. Energy Sources used by us
10. Concept Generation
11. Cost Model
12. House Design CAD and Prototype
13. Conclusion
14. References

## Abstract

Our team, WoED, built a zero energy home, which can be defined as comfortable house that consumes zero net energy yearly. We've been working on Zero Energy for quite some time and faced quite a bit of problems. In order to achieve this goal, we used technologies and materials new to us to produce the goal that we had initially set. Through the course of our project, we used the Eight Step Engineering process introduced to us at the start of this course. Our final design was a one and a half storey, which is sufficient for a family of four with a beautiful terrace garden producing more energy than it consumes.

## Introduction

The first step in making a zero energy home was to identify what exactly is a Zero Energy Home; after much research and survey and analyzing the results in order to get more specific consumer specifications. We sat together to think out our ideas and compare our designs to the already present houses that are currently present. Our main goal in finishing this project was to create a fully functional, affordable and aesthetically pleasing home that produces more energy than it consumes.

## Mission Statement

In the last decade, it has become harder to maintain and utilize the amount of available energy and resources on the earth. Due to this, we designed a house that produces and harness natural energy created in the environment. The goal is to harness and create more energy than the amount consumed in a normal household.

## City/Location

The City chosen by us for the Zero Energy Home Project was Allentown, PA. Allentown is a city located in Lehigh County, Pennsylvania, in the United States. It is Pennsylvania's third most populous city, after Philadelphia and Pittsburgh, and the 222nd largest city in the United States. As of the 2010 census, the city had a total population of 118,032 and is currently the fastest growing city in Pennsylvania. We were asked by some why we decided to choose this city and we simply answered that the city of Allentown is progressing in terms of Energy Saving.

http://goo.gl/pHMzwY

The Sustainability Office is teaming with the Sustainable Energy Fund to provide considerable help to city residents, commercial property and small business owners, and small not-for-profit organizations. All the partners are offering programs that can help property owners make energy-saving (which means money-saving) building improvements. Financial support is available for the upgrading of HVAC systems, window replacement, house insulation and weatherization, the installation of alternative heating systems (wind, solar, geothermal), and more. Basically, we figured since the city has been doing efforts in being energy efficient, we should plan our ZEH in this region.

# Average Temperature Graph

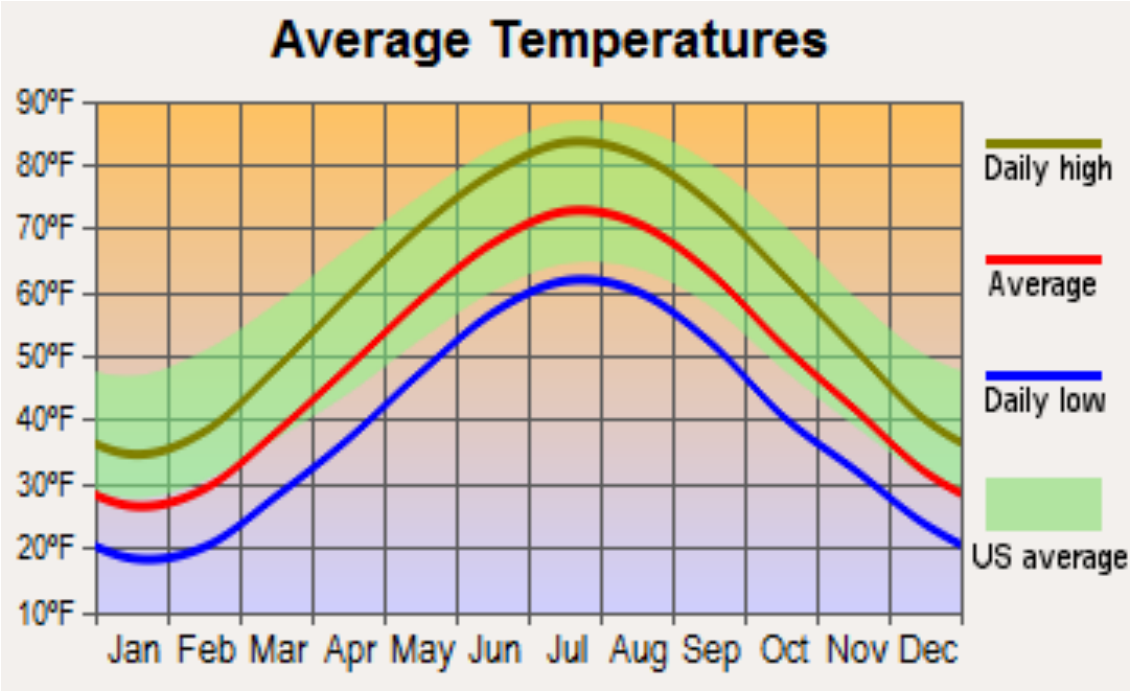


http://www.city-data.com/city/Allentown-Pennsylvania.html

# Previously Built ZEH

| | |
|---|---|
| Location (city, state) | Charlotte, Vermont |
| House size (floor area in square feet) | 2970 |
| Number of floors | 2 |
| URL of web site where info is found | http://zeb.buildinggreen.com/overview.cfm?projectid=1019 |
| Number of occupants | 4 |
| Number of bedrooms | 3 |
| Type of heating system (forced air, hydronic, radiant floor, heat pump, etc. | Ground source heat pump |
| Main heating fuel (electricity, natural gas, wood, oil, etc.) | Electricity by Wind Turbine |
| Size of photovoltaic system (kilowatts) | 5-kW |
| Solar water heater (yes or no) | yes |
| R-value of wall insulation | R-40 |
| R-value of ceiling insulation | R-58 |
| Ventilation air heat recovery (yes or no) | Yes |
| Predicted or measured annual energy use | 22.3 MMBtu |
| Any other pertinent info | |

Photo Credits – David Pill, the owner of the Zero Energy Home.

# Need Statements

| # | Consumer Statement | Needs Statement | Priorities -/5 |
|---|---|---|---|
| 1 | Energy efficient | The house will produce more energy than it consumes | 5 |
| 2 | Comfortably fits a family of fo | The house will have all necessary rooms for a family of four to live comfortably | 4 |
| 3 | Affordable | The house will be financially attainable for a family with average income | 3 |
| 4 | Aesthetically pleasing | The house will have a presentable outward and inward appearance | 3 |
| 5 | Fully functional | The house will have all necessary rooms and appliances for a family to live comfortabl | 5 |
| 6 | Uses natural resources | The house will be powered in part by renewable resources | 3 |
| 7 | Durable | The house will be able to withstand fatigue from weather as well as family life | 4 |
| 8 | Warm, windy climate | The house will be located in an area that aids solar and wind energy | 4 |
| 9 | Easy to maintain | The house's prolonged efficiency will not require a significant amount of work for susta | 4 |
| # | Safety | The safety of the home will not be compromised by new technologies | 5 |
| | | | |

# Needs/Metric Matrix

| Need # | Needs Statement | Energy Star Appliances | Average Annual Temp. Above 60 deg. F | Moderate to High Average Daily Windspeed | Number of Rooms | Uses Renewable Wind, Solar, and Heat Energy | Total Cost of Home and Appliances | Subj. Appearance Rating -/10 |
|---|---|---|---|---|---|---|---|---|
| | Metric | 1 | 2 | 3 | 4 | 5 | 6 | 7 |
| 1 | The house will produce more energy than it consumes | X | | | | X | | |
| 2 | The house will have all necessary rooms for a family to live comfortably | | | | X | | | |
| 3 | The house will be financially attainable for a family with average income | | | | | | X | |
| 4 | The house will have a presentable outward and inward appearance | | | | | | | X |
| 5 | The house will have all necessary rooms and appliances for a family to live comfortably | | | | X | | | X |
| 6 | The house will be powered in part by renewable resources | | | | | X | | |
| 7 | The house will be able to withstand fatigue from weather as well as family life | | X | | | | | |
| 8 | The house will be located in an area that aids solar and wind energy | | X | X | | | | |
| 9 | The house's prolonged efficiency will not require a significant amount of work for sustainability | X | | | | | | |
| 10 | The safety of the home will not be compromised by new technologies | X | | | | | | |
| | | | | | | | | |
| | **Specifications** | | | | | | | |
| | G-E Energy-Star Appliances | | | | | | | |
| | High Average Annual Temperature | | | | | | | |
| | Moderate to High Average Daily Windspeed | | | | | | | |
| | Number of Rooms | | | | | | | |
| | Uses Renewable Wind, Solar, and Heat Energy | | | | | | | |
| | Total Cost of Home and Appliances | | | | | | | |
| | Subj. Appearance Rating -/10 | | | | | | | |

# Path Cost Effective ZEH Graph

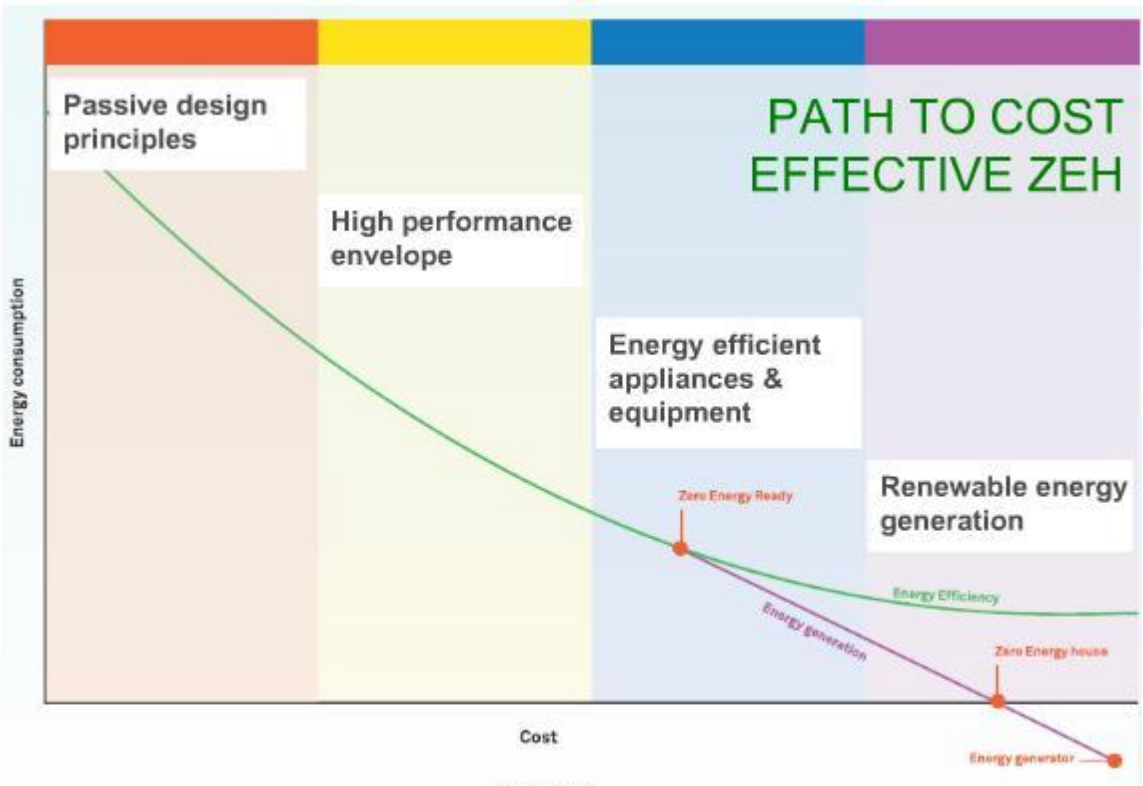


SOURCE:
http://www.slideshare.net/jeffransom/international-zeroenergy-housing

# A Quick Review of existing structures

## Insulation

The most energy efficient ZEHs have R values are that supposed to be high, R-50 or for the ceilings, R-20 or higher for the walls and about R-25 or higher for the floors. A slightly less efficient but less expensive option would be to keep the insulation to R-30 or higher for the ceilings and R-10 or higher for the walls and floor.

## Windows

Triple pane windows with a U factor below .25 will keep the most heat inside a home, but can be very costly. A double window, also with a U factor below .25 will be more cost effective choice. A low U-value means a window has a greater resistance to heat flow and will insulate the home very well.

## Heating and Cooling

Although it may be expensive, a geothermal heat pump is able to provide heat, air conditioning, and clean drinking water. Drilling under the home would be required to complete installation of the system, but of all of our energy and water would directly come from the Earth. It would be a good option if the property is in a rural area, which isn't where our house is located. So it would be an expensive investment but totally worth it as is very cost efficient.

## Hot Water Heating

Geothermal Water Heating is the best option available because it can be a part of the Geothermal Heat Pump that we are installing for the Heating and Cooling. Solar Water Heating is one of the top options available but isn't reasonable because of it's high cost.

## Appliances

The Energy Star rated appliances would be the best, but since price is a serious issue, slightly lower rating appliances are acceptable.

## Energy Supply

Solar power is obviously the best option given there is enough sunlight to run a 2-6 kw Solar Photo Voltaic System. Geothermal Power is an alternative if more energy is needed than Solar Power can provide.

# Energy Sources used by us in our ZEH

1. **Solar Power:** Solar panels use photovoltaic (PV) cells in order to convert sunlight into usable electricity. Photovoltaic cells use semiconductors (usually Silicon) to convert photons from the sun into electrons, which can be used as electricity to power a home.

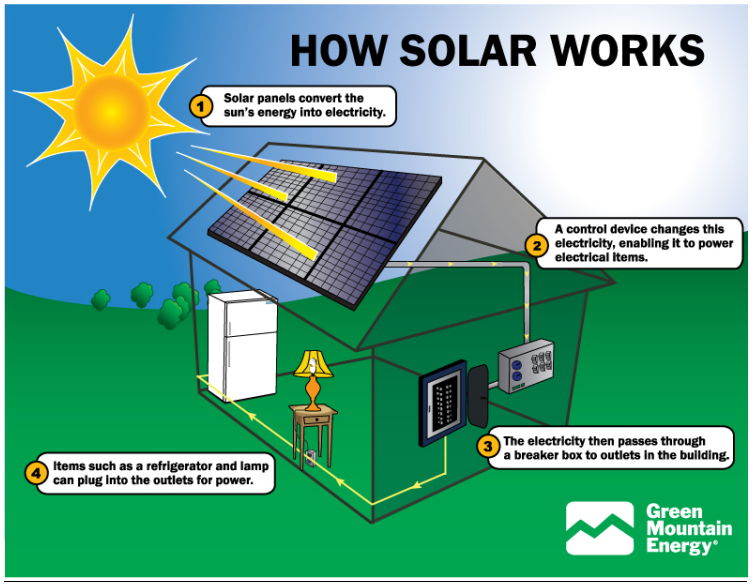

2. **Geothermal Power:** It is a central heating and/or cooling system that pumps heat to or from the ground. It uses the earth as a heat source in the winter and a heat sink in the summer. The design takes advantage of moderate temperatures in the ground to boost efficiency and reduce the operational costs of heating and cooling systems.

## Concept Generation

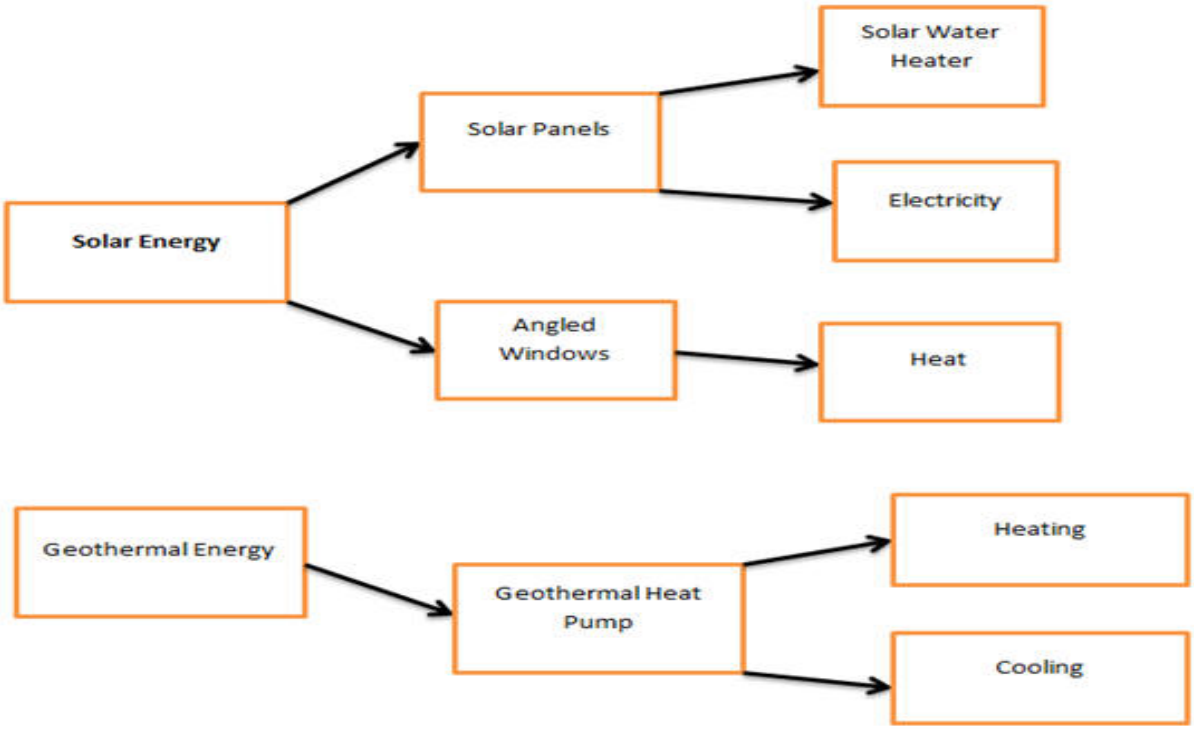


The first step is to prepare the selection matrix,
We gathered our concepts (types of homes) and our selection criteria, we arranged it into a matrix to compare and contrast the different concepts. Our selection criteria was energy efficient, adequate spacing, cost factor, aesthetically pleasing or not, whether it is fully functional, uses natural resources, it is durable, the shape and many such factors.
Our second step was to rate the concepts, our system of grading each house was that if the concept met the specified selection criteria, then it would receive a 0, if it exceeded the criteria it received a +1, and if it failed to meet the criteria it received a -1. After analyzing each concept we then took a sum their scores by adding all the +'s, subtracting all the –'s, and neglecting all the 0's.

As soon as we were done with our scoring, we used this score to rank them from highest score to lowest score, and the concept with the highest score was used in our home.

| | High R-Value | Low R-Value | Dome | Flat Roof | Big House | Small House | Geothermal Heating | Solar Panels | Solar Water Heating | Large Windows |
|---|---|---|---|---|---|---|---|---|---|---|
| Energy Efficient | + | - | + | - | - | + | + | + | + | + |
| Comfortably fits a family of four | 0 | 0 | + | + | + | - | 0 | 0 | 0 | + |
| Affordable | - | + | - | + | - | + | - | + | - | + |
| Aesthetically Pleasing | 0 | 0 | + | 0 | + | - | + | - | - | + |
| Fully Functional | + | + | + | + | + | - | + | + | + | + |
| Uses natural resources | + | - | + | - | - | + | + | + | + | + |
| Durable | + | + | + | 0 | + | + | + | + | + | + |
| Warm, Windy climate | 0 | 0 | + | 0 | 0 | 0 | + | + | + | + |
| Easy to Maintain | + | + | + | + | - | + | + | + | + | - |
| Safety | 0 | 0 | + | + | 0 | 0 | + | + | + | - |
| | | | | | | | | | | |
| Sum +'s | 5 | 4 | 9 | 5 | 4 | 5 | 8 | 8 | 7 | 8 |
| Sum -'s | 1 | 2 | 1 | 2 | 4 | 3 | 1 | 1 | 2 | 2 |
| Sum 0's | 4 | 4 | 0 | 3 | 2 | 2 | 1 | 1 | 1 | 0 |
| **Net Score** | **4** | **2** | **8** | **3** | **0** | **2** | **7** | **7** | **5** | **6** |
| Continue? | Yes | No | Yes | No | No | Yes | Yes | Yes | Yes | Yes |

| | | Concepts | | | |
|---|---|---|---|---|---|
| | Selection Criteria | A | B | C | D |
| Metric # | | Dome | Elevated Dome | Triple Dome | Regular House |
| 1 | Energy Efficient | + | + | 0 | - |
| 2 | Comfortably fits a family of fou | - | + | + | + |
| 3 | Affordable | 0 | 0 | - | 0 |
| 4 | Aesthetically Pleasing | 0 | + | - | + |
| 5 | Fully Functional | 0 | 0 | 0 | 0 |
| 6 | Uses natural resources | 0 | 0 | 0 | 0 |
| 7 | Durable | + | 0 | + | - |
| 8 | Warm, Windy climate | 0 | 0 | 0 | 0 |
| 9 | Easy to Maintain | + | + | 0 | 0 |
| 10 | Safety | + | + | - | 0 |
| | | | | | |
| | Sum +'s | 4 | 5 | 2 | 2 |
| | Sum 0's | 5 | 5 | 5 | 6 |
| | Sum -'s | 1 | 0 | 3 | 2 |
| | Net Score | 4 | 6 | 0 | 1 |
| | Rank | 2 | 1 | 4 | 3 |
| | Continue? | No | Yes | No | No |

**Correlation:**

◎ -Strong Positive
○ - Weak Positive
✦ - Negative

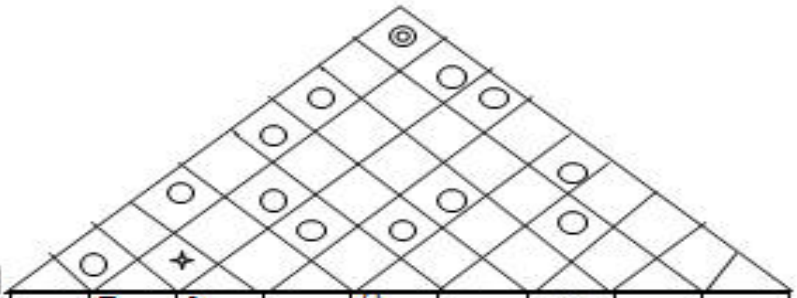

Characteristics

Importance

Customer Needs

| | | Small Amount of Work (kilo Joules) | Average Annual Temp. Above 60 deg. F | Moderate to High Average Daily Wind speed | Number of Rooms | Uses Renewable Wind, Solar, and Heat Energy | Total Cost of Home and Appliances | Subj. Appearance Rating -/10 | High Safety Rating | Efinal > Einitial (kJ) |
|---|---|---|---|---|---|---|---|---|---|---|
| Energy efficient | 5 | ◎ | ○ | ◎ | | ◎ | ○ | | | ◎ |
| Comfortably fits a family of four | 4 | | | | ◎ | | | ○ | | |
| Affordable | 3 | ○ | | | ○ | | | | | |
| Aesthetically pleasing | 3 | | | | ○ | | | ◎ | | |
| Fully functional | 5 | | | | | ○ | | | | ◎ |
| Uses natural resources | 3 | | ○ | ◎ | | ◎ | | | | |
| Durable | 4 | | | | | | ◎ | | ◎ | |
| Warm, windy climate | 4 | | ◎ | | | | | | | |
| Easy to maintain | 4 | ◎ | | | ○ | | | | | ○ |
| Safety | 5 | | | | | | | | ◎ | |
| Importance Weighting 9=strong | - | 4 | 7 | 3 | 5 | 9 | 7 | 6 | 9 | 9 |
| Target Values | - | Maintain | Maintain | x>7.0 mph | 4 Upst, 5 Down at Most | Maintain | X < $500k | X avg.> 7.0 | Maintain | Maintain |
| Evaluation (Y/N) | | Y | Y | Y | Y | Y | Y | Y | Y | Y |

# Cost Model

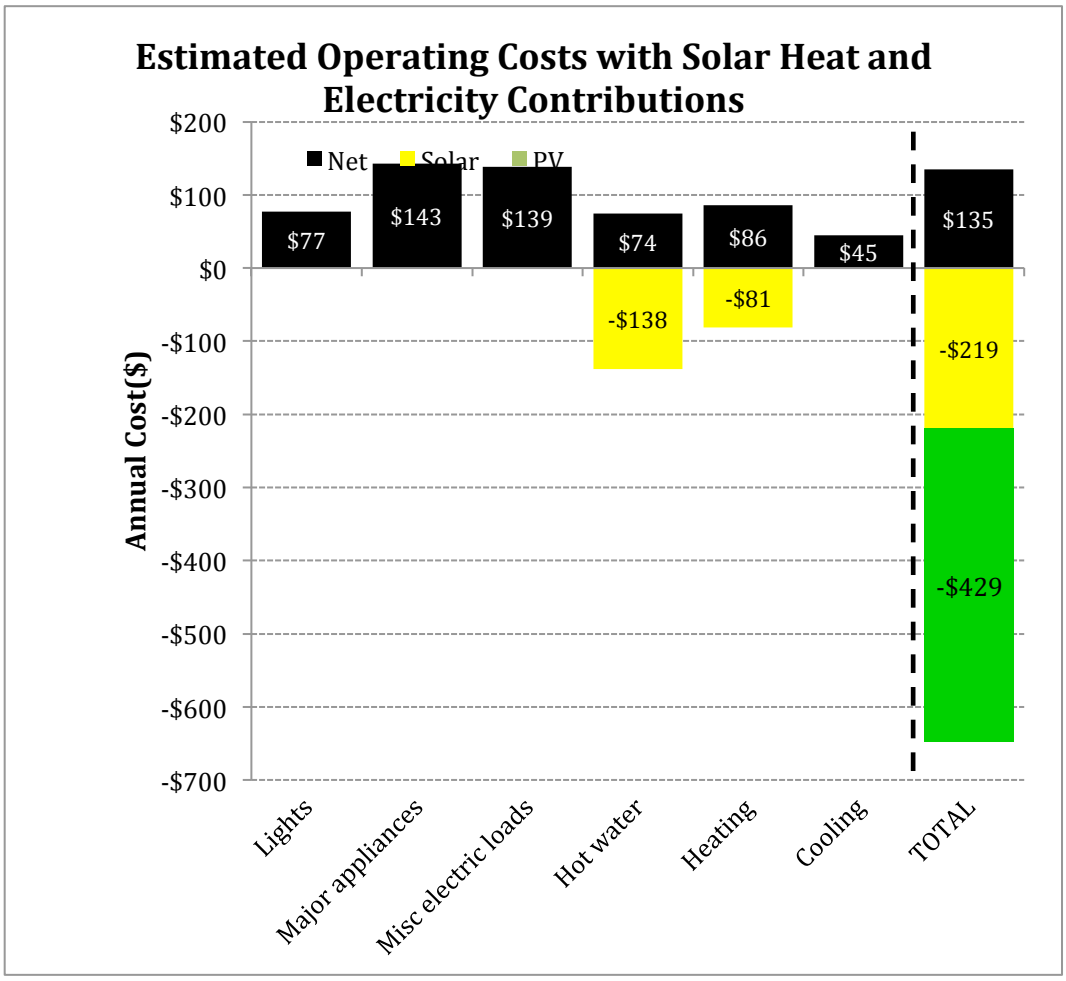
Estimated Operating Costs with Solar Heat and Electricity Contributions
Net
Solar
PV
Annual Cost($)
$200
$100
$0
-$100
-$200
-$300
-$400
-$500
-$600
-$700
$77
$143
$139
$74
$86
$45
$135
-$138
-$81
-$219
-$429
Lights
Major appliances
Misc electric loads
Hot water
Heating
Cooling
TOTAL

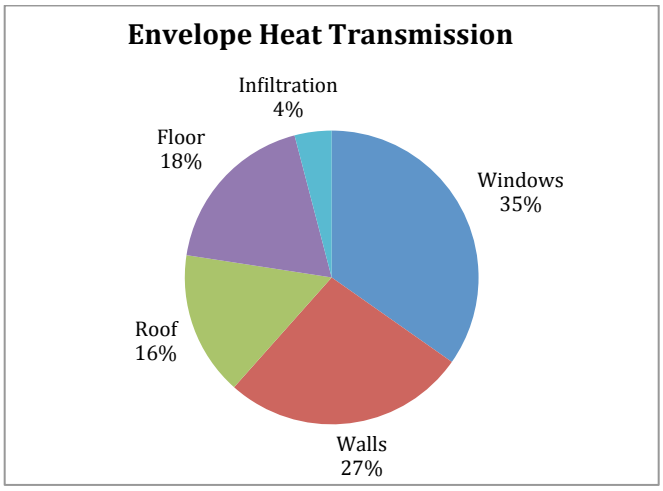
Envelope Heat Transmission
Infiltration 4%
Floor 18%
Windows 35%
Roof 16%
Walls 27%

**General Info**

| | |
|---|---|
| Location | Pittsburgh |
| Electricity cost ($/kwh) | 0.1 |
| House type | 1.5 story |
| Conditioned floor area (sq.ft.) | 1150 |
| Number of bedrooms | 2 |

**Envelope Details**

| | |
|---|---|
| Wall construction | Double 2x4 with 10" foam |
| Ceiling Insulation | R40 |
| Window type | Triple low-e |
| Upper floor ceiling area (sq.ft.) | 1150 |
| North wall area (gross) (sq.ft.) | 800 |
| East wall area (sq.ft.) | 400 |
| South wall area (sq.ft.) | 800 |
| West wall area (sq.ft.) | 400 |
| North window area (sq.ft.) | 100 |
| East window area (sq.ft.) | 100 |
| South window area (sq.ft.) | 200 |
| West window area (sq.ft.) | 0 |
| Air tightness | Tight with heat recovery |

**Appliances**

| | |
|---|---|
| Refrigerator | Best |
| Clothes Washer | Best |
| Dishwasher | Best |
| Small Appliance Input | |

**Extras**

| | |
|---|---|
| Garage | g. Built In 2 car |
| Hot Tub | a. None |

| | |
|---|---|
| Type of heating & cooling system | Electric geothermal heat pump |

**Solar Technologies**

| | |
|---|---|
| Size of PV system (kw) | 3.50 |
| Solar water heater | Yes |

**Behavior**

| | |
|---|---|
| Water conservation | A lot |
| Uses clothesline | A lot |
| Thermostat setback | Some |
| Heat thermostat setting (F) | 70 |
| Cool thermostat setting (F) | 60 |

Our house was efficiently made with all facilities for a good price of 150,000; being slightly over the budget but providing ace class of living for the family of four with adequate space and aesthetically beautiful house.

## House Design CAD and Prototype

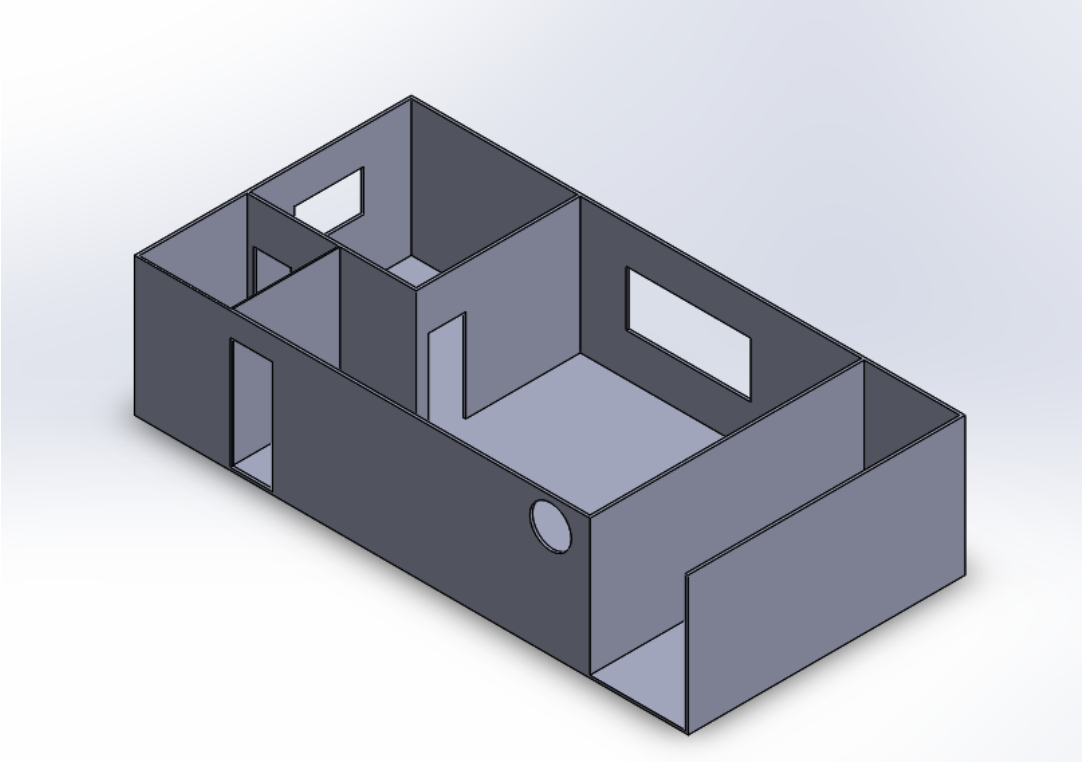

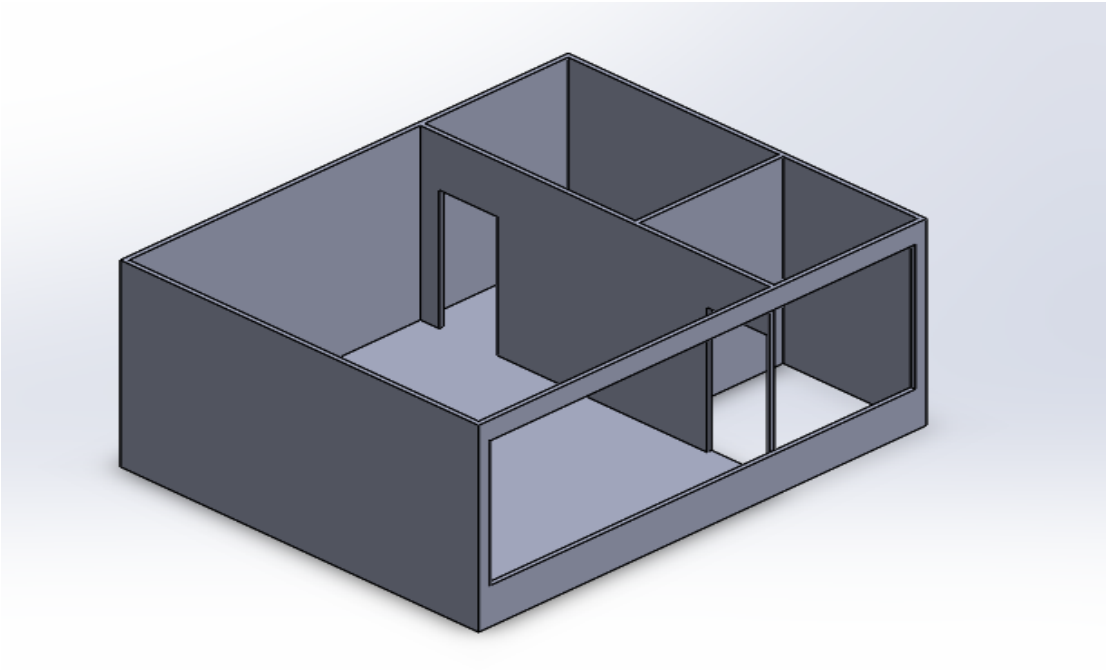

We used a 1.5 storey plus huge open terrace garden design for the ZEH project. Because of this the family of four have enough space to stay on the ground floor and space for a bedroom on the top floor with a beautiful view of the garden and surroundings. On the south side of the house, we can see the solar panel inclined at a perfect 40 degree house which attract the most energy and help run all the appliances present in the house. A huge window is also adjoining the top room and the terrace garden, which is planned with an inner slab, used to absorb heat and keep the house warm. Energy Star appliance were initially planned but due to cost constraints, we were only able to use “Best” quality.

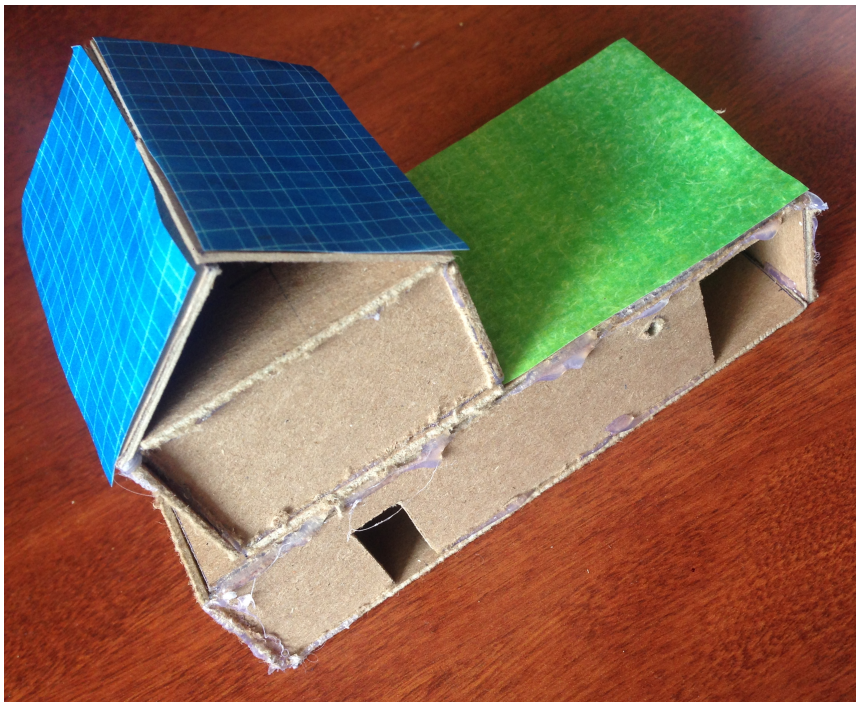

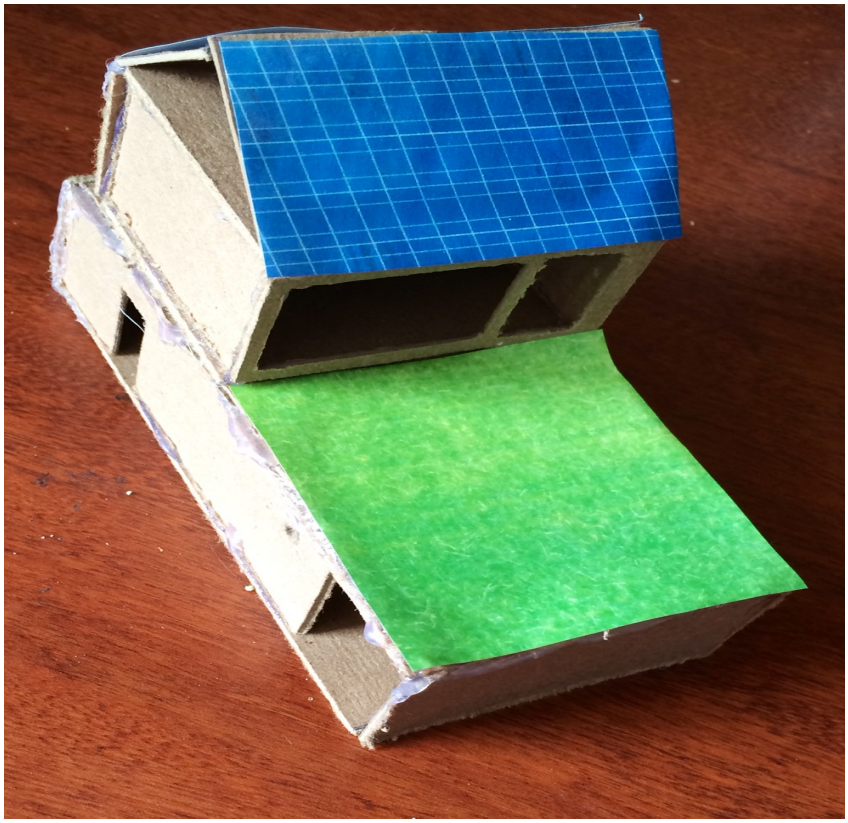

## Conclusion

During the course of this project, we were able to create a zero energy home that uses solar panels as well as energy efficient technology like geothermal energy sources in order to produce more energy than it consumes. We utilized a hut style roof in order to create more solar energy as we were told by our professors the angle of 40 degrees is considered extremely good for the sun rays. We also implemented a solar-powered water heater and insulation with high R-values so as to conserve as much energy as possible. The house is located in Allentown, PA, which has different weather conditions throughout the year. The home also uses best appliances available in the budget provided as well as fluorescent light bulbs, in order to consume less energy overall. By implementing new energy efficient technology, we were able to create a comfortable home for the average American, which will save money as well as the environment in the long run.

# References


1) http://www.ucsusa.org/clean_energy/technology_and_impacts/energy_technologies/how-geothermal-energy-works.html

2) http://www.weather.com/weather/wxclimatology/monthly/graph/95661

3) http://ufgscriteria.tpub.com/ufc_3-440-01/ufc_3-440-010012.htm

4) http://energy.gov/science-innovation/energy-sources/renewable-energy/water

5) zechallenge.com

6) www.wikipedia.com