Engineering Design 100
Section 009
Team 3

Design Project 1 Report: North Easter

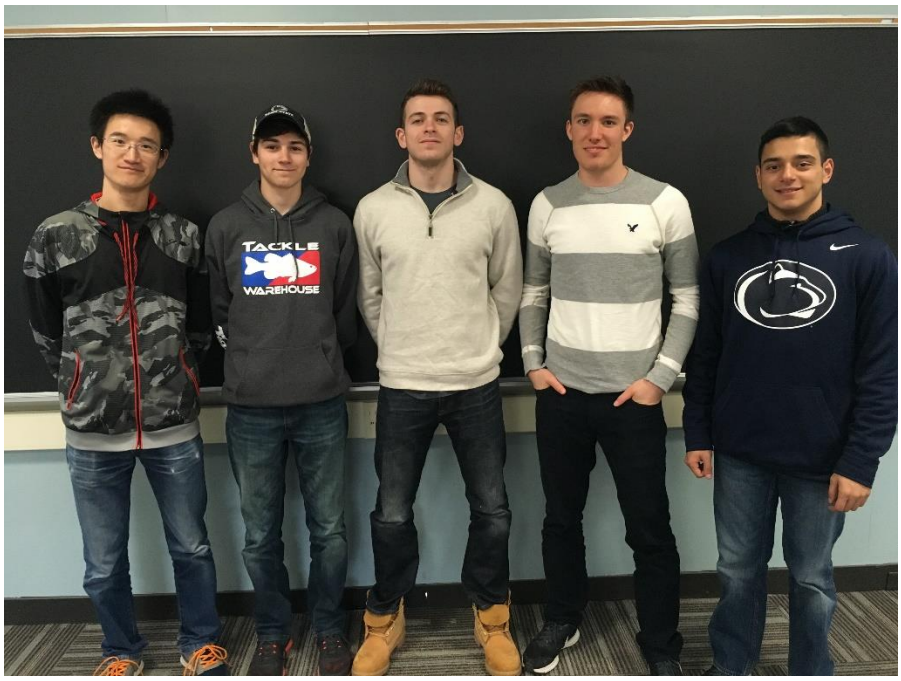

Submitted by: Aaron Aguiles
Christopher Trianosky
Ian Flahart
Tyler Wolf
Kesheng shen

Submitted to: Xinli Wu

Date Submitted: 3/21/16

Abstract: The goal for this project was to design and create a machine that would be able to produce dumplings within a household or restaurant environment. This machine had to meet certain specifications in order for it to be desirable to the public. This reports follows the process of that Team 3 used to create the dumpling maker named North Easter.

Table of Contents

Cover Page……. Ian Flahart

Abstract……. Aaron Aguiles

Table of Contents……..Aaron Aguiles

Introduction……. Ian Flahart

Description of the Design Task

Problem Statement……. Ian Flahart

Mission Statement……. Ian Flahart

Design Specifications……. Aaron Aguiles

Design Approach

Gantt Chart……. Aaron Aguiles

Customer Needs Assessment…… Tyler Wolf and Christopher Trianosky

Concept Generation…… Team Effort

Design Selection Matrices……. Team Effort

Final Design and Prototype

Working Drawings of Final Design…… Chris Trianosky

Prototype Scale and images…… Chris Trianosky

Operation Instructions……. Ian Flahart

Engineering Analysis

Working mechanism……. Tyler Wolf

Cost analysis…… Tyler Wolf

Sumary and Conclusions……. Ian Flahart

Acknowledgements……. Ian Flahart

References……. Tyler Wolf

Introduction:
It has been determined that an automatic or semi-automatic dumpling maker could be a useful tool for many Chinese restaurants that sell dumplings. Team 3 has designed the "North Easter" for this purpose. The "North Easter" is a semi-automatic, low-cost, easy to use dumpling making machine that meets all the design specifications proposed by Professor Xinli Wu. Its design was chosen after careful consideration was given to an array of innovative ideas. The following report will offer a detailed outline of Team 3's design process.

Description of the Design Task

Problem Statement:
There is not a good supply of efficient, practical, and cost-effective dumpling makers on the market.

Mission Statement:
The goal is to design a semi-automatic dumpling maker that reliable, cheap, and easy to use.

Design Specifications:

- The dumpling maker should be automatic or semiautomatic
- The dumpling maker should produce no less than ten dumpling per minute on average
- The material cost for the dumpling maker should not exceed $200 unless it can be justified
- The dumpling maker should be safe as a food processor, easy to maintain, safe to use, and dishwasher safe

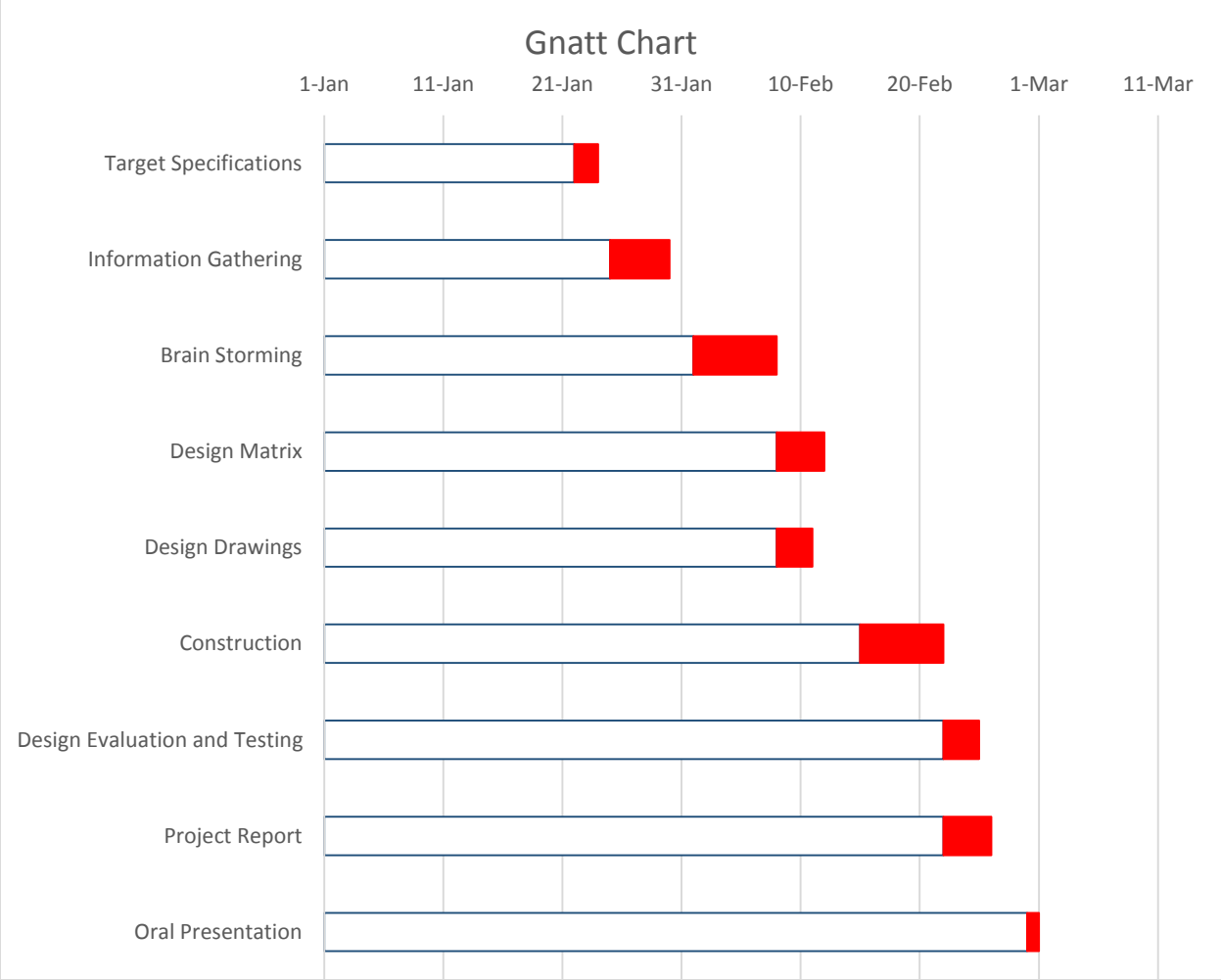

Customer needs assessment:
Having a machine to make dumplings would allow many restaurant to be more efficient and to save money.

Restaurant Name	**"Do you hand make your dumplings?"**	**"Would you be interesting in using a machine?"**
"Shun Lee Palace"	Yes	No
"Nan Zhou Noodle House"	Yes	No
"How Lee Restaurant"	Yes	People have tried to sell them a machine before; they turned it down.
"PF Chang's" (Large restaurant chain)	"Hand-rolled"	Would not be interested in a machine; they take pride in hand making.

Concept Generation:

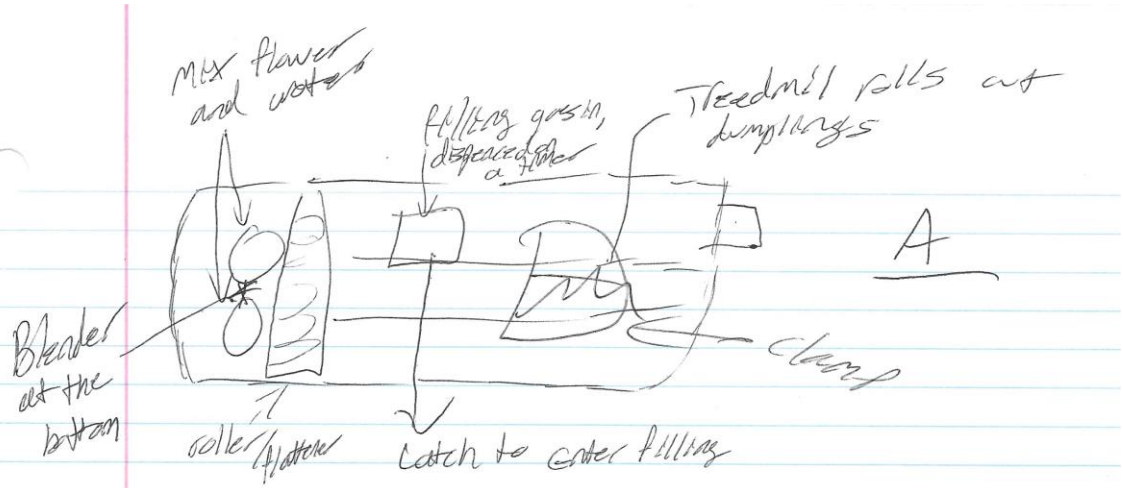

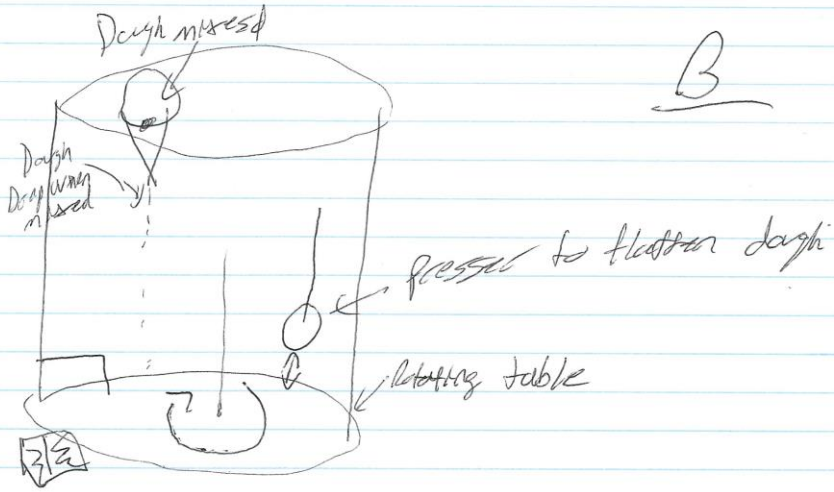

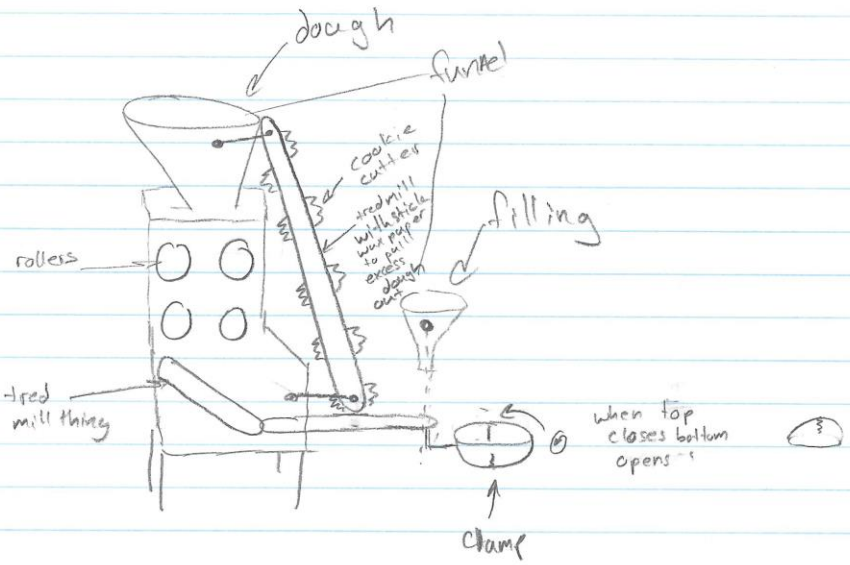
dough
funnel
cookie cutter
treadmill with sticks wax paper to pull excess dough out
filling
rollers
tred mill thing
when top closes bottom opens
clamp

"Conveyer" concept

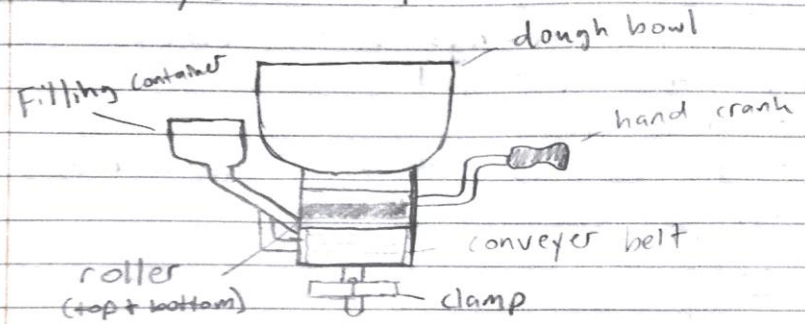

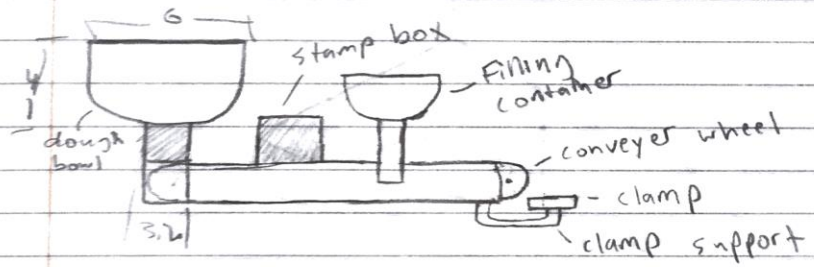

Design Selection Matrices:

Selection Criteria	Weight	A		B		C		D	
		Rating	Weighted Score	Rating	Weighted Score	Rating	Weighted Score	Rating	Weighted Score
Ease of Use	20%	2	0.4	4	0.8	2	0.4	4	0.8
Durability	15%	3	0.45	4	0.6	2	0.3	3	0.45
Safety	10%	2.5	0.25	3	0.3	2	0.2	4	0.4
Ease of Cleaning	10%	4	0.4	2	0.2	4	0.4	2	0.2
Size	20%	3	0.6	2	0.4	3	0.6	4	0.8
Ease of Manufacturing	10%	2	0.2	3	0.3	1	0.1	3	0.3
Cost of Materials	15%	3	0.45	3	0.45	4	0.6	3	0.45
Total Score Rank		2.35		3.05		2.6		3.4	
Continue?		No		Yes		No		Yes	

Selection Matrix

Selection Criteria	A	B	C	D
	Rating	Rating	Rating	Rating
Ease of Use	-	+	-	+
Durability	0	+	-	0
Safety	-	0	-	+
Ease of Cleaning	+	-	+	-
Size	0	-	0	+
Ease of Manufacturing	-	0	-	0
Cost of Materials	0	0	+	0
Sum +	1	2	2	3
Sum 0	3	3	1	3
Sum -	3	2	4	1
Net Score	-2	0	-2	2
Rank	4	2	3	1

Design Matrix

Final Design and Prototype

Working Drawings of Final Design and Parts:

Figure 1: Assembly Drawing

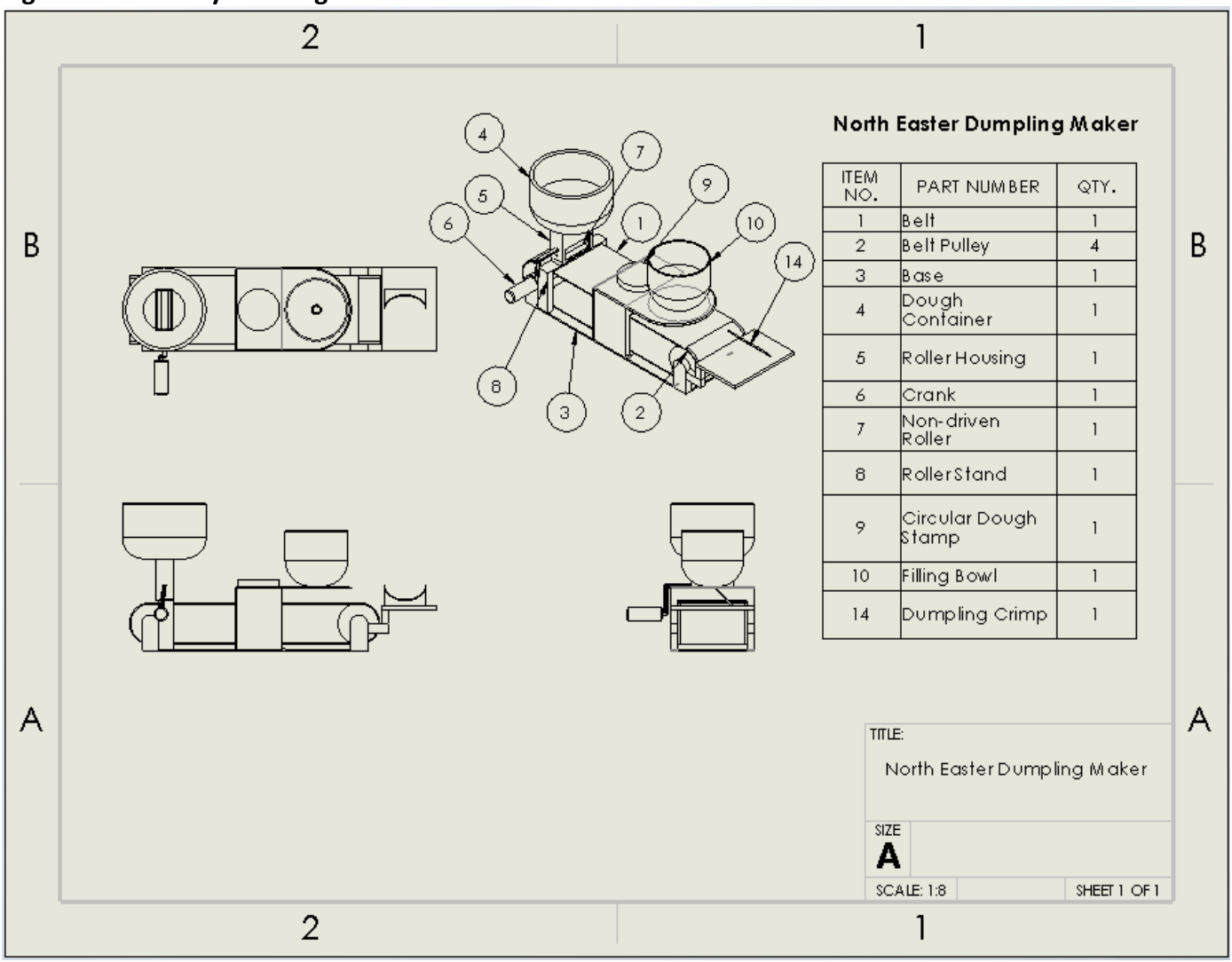

Figure 2: Roller Housing Design

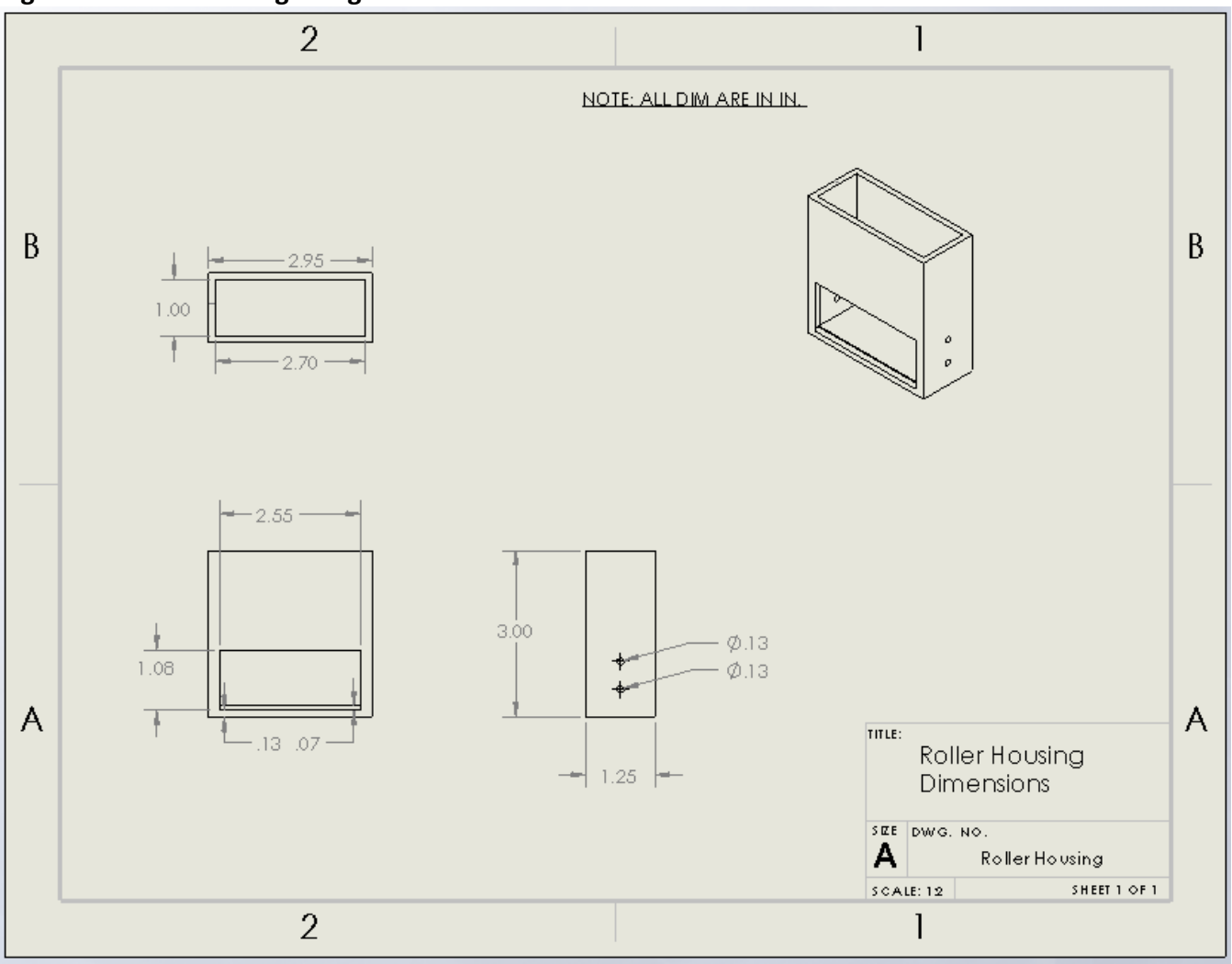

Figure 3: Filling Bowl Design

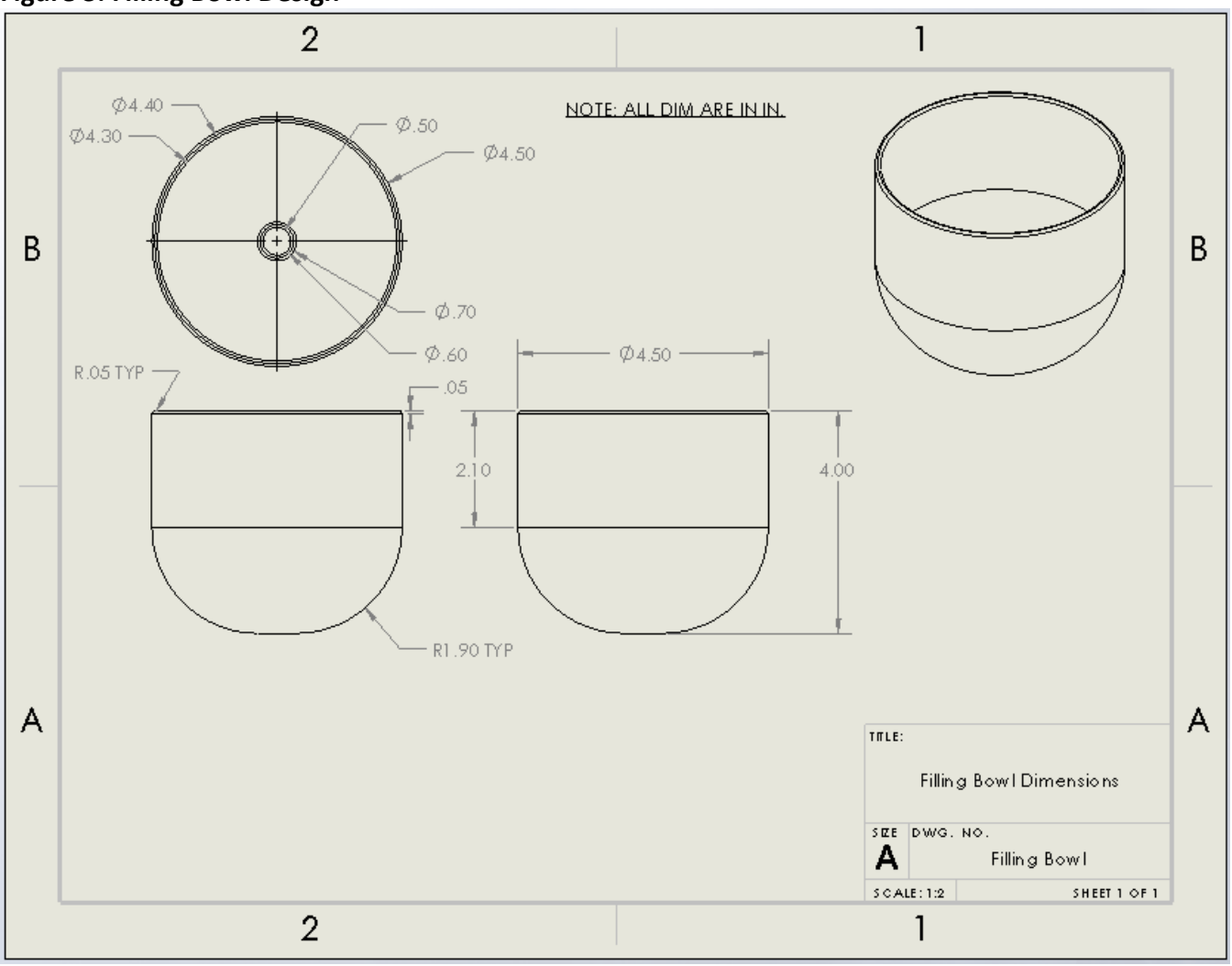

Figure 4: Belt Design

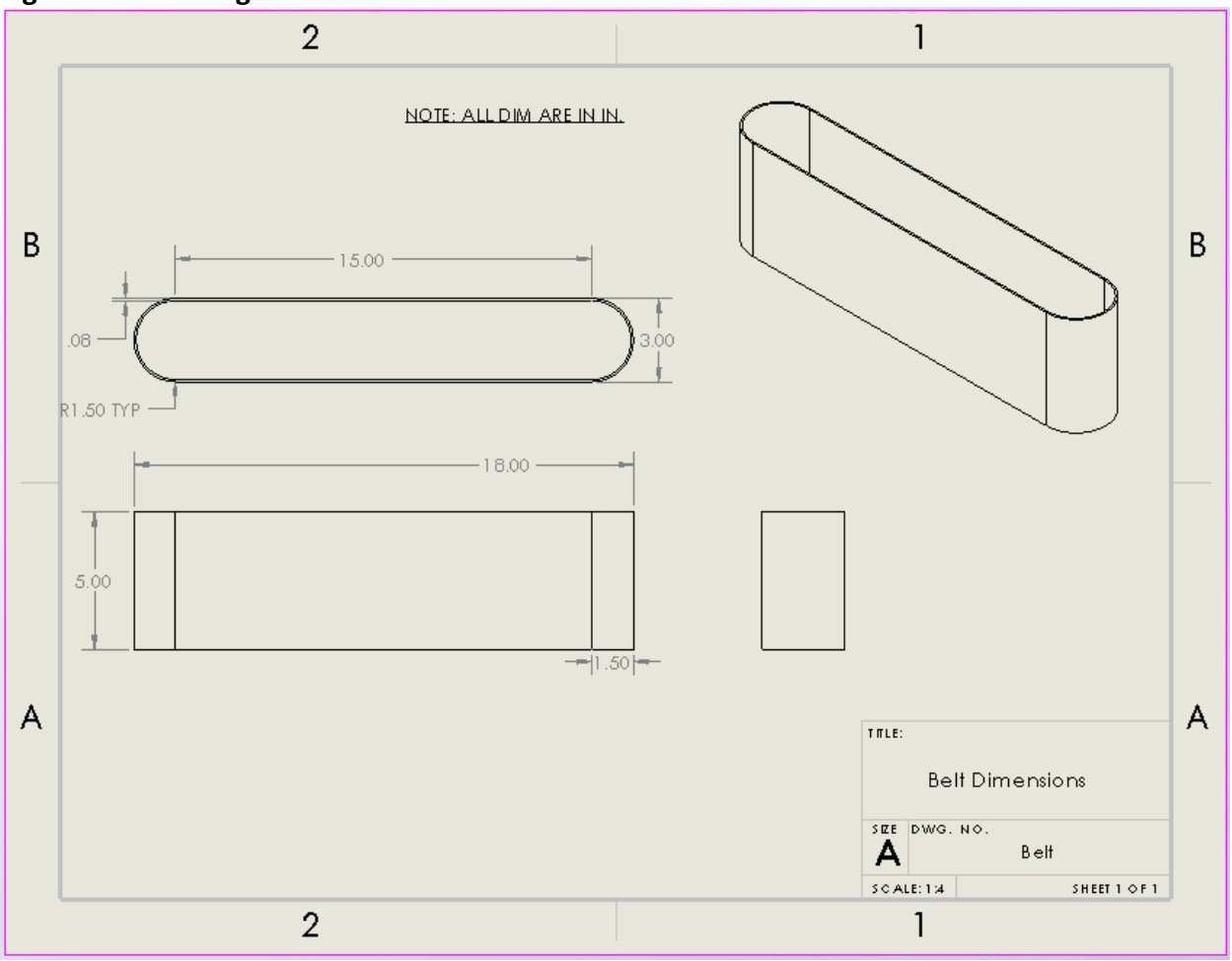

Prototype Scale and Images:

Scale is 1:1

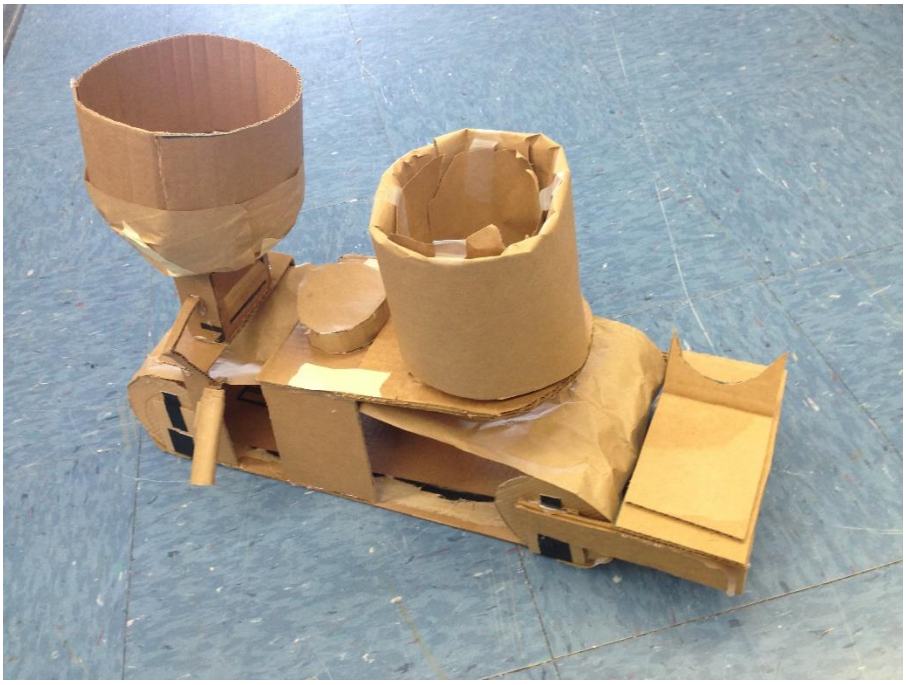

Operation Instructions:
To operate the "North Easter," the user places pre-made dough in the funnel of the machine. After the dough is loaded, the user simply turns the handle on the side of the machine. This action rotates the conveyer belt and operates the stamping mechanism and clamping mechanism. The user continues to turn the handle until the machine requires more dough or the desired amount of dumplings are made.

Engineering Analysis

Working Mechanism:
Once the dough has entered the funnel of our dumpling maker it falls down into the first part of our device. The dough piles up behind the rollers where it awaits to be hand cranked, flattened, and rolled into the doughs natural shape. As the operator cranks, the flattened dough continues on a conveyor belt where it next is stamped into its new shape. The shape it is in now is circular and will allow for the dough to later be folded into the traditional dumpling shape. Next on the

conveyor belt the dumpling filling is dropped into the center of the dough. The final step is reaching the end of the belt where the dumpling is folded, sealed, and now complete.

Cost Analysis:

Part	Qantity	Material	Cost
Dough Bowl	1	Stainless Steel	$9.64
Hand Crank	1	Aluminum	$19.38
Cylindrical Rollers	2	Stainless Steel	$14.00
Conveyer Belt	1	Super Grip Rubber	$12.00
Belt Pulleys	2	Anodized Aluminum	$17.20
Filling Bowl	1	Stainless Steel	$6.65
Funnel	1	Washable Plastic	$9.40
Stamper	2	Aluminum	$5.60
Stamper Box	1	Plastic	$5.62
		Total	$99.49

Summary and Conclusions

Building this machine has been a successful project. The design is low-cost, easy to use/clean, compact and durable. If more time were available, improvements could be made to the filling mechanism. Implementing a more efficient way, other than gravity, to apply the filling to the dough would result in less wasted ingredients. All aspects considered, however, Professor Wu's proposed specifications were quite closely met. This machine would be able to serve as a handy tool for making dumplings in any medium to large scale Chinese restaurant.

Acknowledgements

Professor Wu's knowledge and experience proved an important asset in this design process. His suggestions and guidance was extremely helpful in choosing the most promising design and moving forward with development. His knowledge of the design process allowed Team 3 to work

very efficiently. Acknowledgement should also be given to the following Chinese restaurants that were contacted: “Shun Lee Palace,” “Nan Zhou Noodle House,” “How Lee Restaurant,” and “PF Chang’s.” The input from these restaurants was critical to the development of the customer needs assessment.

References

http://www.mcmaster.com/#hand-cranks/=118mn5c
-HandCrank
http://www.mcmaster.com/#=118mtca
-Dough Bowl, Filling Bowl
http://www.mcmaster.com/#standard-rollers-for-conveyors/=118mu1d
-Cylindrical Rollers
http://www.mcmaster.com/#flat-belts/=118mx3c
-Conveyer Belt
http://www.mcmaster.com/#timing-belt-pulleys/=11c7lqs
-Belt Pulleys
http://www.mcmaster.com/#funnels/=11c7ndy
-Funnel
http://www.mcmaster.com/#cookie-sheets/=11c7o6y
-Dough Stampers