Foldable Shopping Cart Leisure Bag

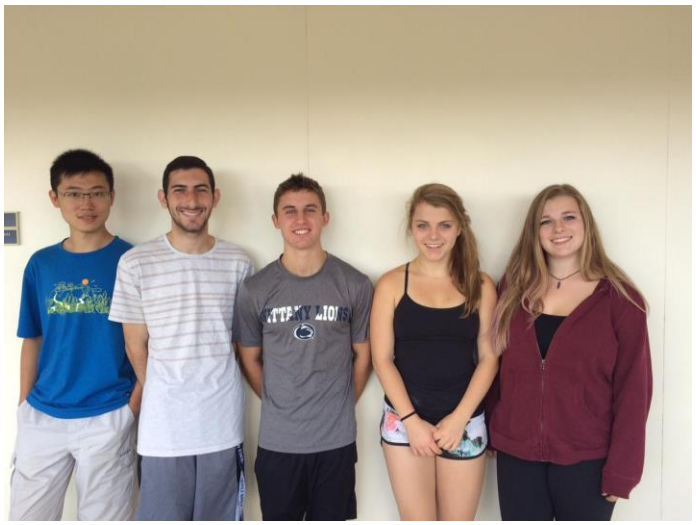

EDSGN 100

Section 204 Team 2

Submitted by (left to right) : Xiang An, Daniel Gottlieb, Austin Veres, Rose Gitterman, and Lily Diefes

Submitted to: Xinli Wu

30 August- Summer 2015

http://personal.psu.edu/dug6/edsgn100_su15_section204_team2_dp1.pdf

Abstract
The job being to create an easily storable shopping cart for people who walk long distances to local stores. Shown in this report is the project overview, designs that were examined and compared, a basic schedule for production along with other materials that were used in the decision making and manufacturing processes.

Introduction

The purpose of the foldable shopping cart with a leisure bag is to make it easier for customers to carry groceries from the store to their homes over hills and up stairs. The ability to put groceries in a portable cart allows the customer to take one trip instead of many to and from the store. This cart allows for the transportation of heavier items, such as a case of water bottles, which without the cart is extremely difficult to carry. In addition, the customer would save money because the cost of the shopping cart is far less than the price of other modes of transportation, such as a car, which also require gas. With these qualities, the foldable shopping cart is sure to make the lives of many customers easier.

Table of Contents:

Cover Page…….Group
Abstract…….Dan
Introduction…….Lily
Description of Design Task…….Xiang
    Problem statement
    Mission statement
    Design specifications
Design Approach…….Group
    Project management - Gantt chart
    Customer needs assessment
    Concept generation
    Design selection matrices
Final Design and Its Prototype…….Lily and Xiang
    A complete set of working drawings of your final design
    Prototype scale and a digital image(s) of your prototype
    Design features
    Operation instructions
Design Analysis…….Rose
    Working mechanism
    Cost analysis

Description of Design

Problem Statement:

Sometimes, some people have to go to the grocery stores without an automobile, because of short distance of a few blocks that does not require a car, or of the fact that they don't have a car to carry all the heavy loads. It becomes needed and necessary for them to have a shopping cart to take the grocery from the store back to home.

Mission Statement

The goal is to design and build a prototype of foldable shopping cart. The designated shopping cart is to help those who would like to go shopping for a walking distance without automobiles for any possible reasons, while is needed to easily pass through certain difficulties, including stairs, up hills, or other bumpy road surface.

Design Specifications

The design should be easy to use;
The design should be foldable, in order to save storage space;
The design should be able to load 100 lb weight to carry enough groceries;
The design cost should be less than 50 U.S. dollars to be affordable by most people.

Design Approach

Gantt Chart:

Lab Date (2015)	2 Jul	6 Jul	9 Jul	13 Jul	16 Jul	20 Jul	23 Jul	30 Jul
Identify Needs								
Target Specifications								
Information Gathering								
Concept Generation and Selection								
Brainstorming								
Design Matrix								
Design Drawings								
Prototype								
Construction								
Design Evaluation and Testing								
Present								
Project Report								
Oral Presentation								

Customer Needs Survey Questions

1. Generally how far of a walk do have to your local stores?
2. How many groceries do you buy?
3. Are there stairs on the path to your local store?
4. Do you need a rest, e.g. sitting on a chair, on your way to and from the store?
5. Describe the terrain from your house to the store.

Austin:

1. Derek Li, 18
    a. About a 1 mile walk
    b. Anywhere from 2-3 bags
    c. 1 set of stairs
    d. No need for any rest
    e. About 2 hills over grassy terrain, sidewalks, and a few busy roads.
2. Karen Veres, 54
    a. Around a half of a mile
    b. Around 3-5 bags
    c. There are about 3 sets of stairs on the way
    d. Occasionally will stop on the way back from the store to take a rest on a bench.
    e. Pretty flat terrain over sidewalks

Rose:

1. Lori Gitterman
    a. About one quarter of a mile.
    b. 5-7 bags
    c. No stairs
    d. No rest needed
    e. House is on top of a hill, driveway is pretty planned
2. Katie Bibeau
    a. 1 mile
    b. 8-10 bags
    c. No stairs
    d. No rest needed
    e. House is on steep short hill

Lily:

1. Cassie Diefes, 48
    a. About a mile walk
    b. Around 10-15 bags
    c. No stairs
    d. No rest needed
    e. One gradient hill the whole trip on a sidewalk
2. Olivia Dolan, 18
    a. About a quarter of a mile to a mile and a half
    b. From 2-3 bags
    c. About 2 sets of stairs
    d. No rest needed
    e. One slightly inclined hill

Sean:

1. Yi Zeng, 20
    a. About 5 minutes walk
    b. Around 5-8 bags
    c. No stairs
    d. No rest needed
    e. Apartment is on the flat ground
2. Junxia Gu, 47
    a. About 20 minutes walk
    b. About 5 bags
    c. Third floor
    d. No rest needed
    e. Only flat ground

Dan:

1. Joan Gottlieb, 57
    a. 1 mile
    b. 3
    c. No
    d. No
    e. A lot of hills
2. Debbie Horton, 66
    a. About a 45 minute walk, 3 miles
    b. 4 to 5 bags
    c. No
    d. No
    e. Mainly flat, if any, very small hills

Concept Generation:

Gyro Bag:

A cart with a hanging bag. The bag is always down towards the ground that allows you to travel up steps or tilt the support bars.

Backpack

A shopping cart you can wear on your back, it can help you carry all your groceries and others due to its multi use capabilities. It has many pouches for maximum storage and a handle and wheels for when it's full.

Leisure Bag:

A three-wheel aluminum cart with a detachable leisure bag to be used for other occasions. The handle is attached to the front of the cart at the top and is connected to the opposite corner at the bottom. You used the handle to fold the cart for storage.

Chair:

A Shopping cart that allows you to stop for a rest or bring snacks to your kid's sports games with convenient storage. This cart is also a chair, so on your long walk to and from the supermarket you can take a rest if needed.

4 Wheels:

This shopping cart is the classic bag that is great for any off-road paths. Its large wheels make the rough terrain easy to travel with groceries. The bag can carry a lot and is easy to push or pull to your destination.

Design Selection Matrices:

Selection Criteria	**Gyro Bag**	**Backpack**	**Leisure Bag**	**Chair**	**4 Wheels (Reference)**
Durability	-	0	+	0	0
Compactable	+	0	+	-	0
Portability	-	+	0	-	0
Ease of Use	+	+	0	-	0
Ease of Construction	+	0	0	-	0
Extra Feature	0	+	+	+	0
Cost	-	-	0	-	0
Sum +'s	3	3	3	1	0
Sum 0's	1	3	4	1	7
Sum -'s	3	1	0	5	0
Total	0	2	3	-4	0
Rank	3	2	1	5	3
Continue?	Combine	No	Yes	No	Combine

Selection of Criteria	Weight	Leisure Bag	Weighted Score	4 Wheel/Gyro Bag Combined	Weighted Score
		Rating		Rating	
Durability	20%	4	0.8	3	.6
Compactable	15%	3	0.45	2	.3
Portability	15%	3	0.45	3	.45
Ease of Use	20%	4	0.8	3	.6
Ease of Construction	15%	4	0.6	2	0.3
Extra Feature	5%	4	0.2	3	0.15
Cost	10%	3	0.3	3	0.3
Total	100%	25	3.6	19	2.7
Rank		1		2	
Continue?		yes		no	

Working Drawlings:

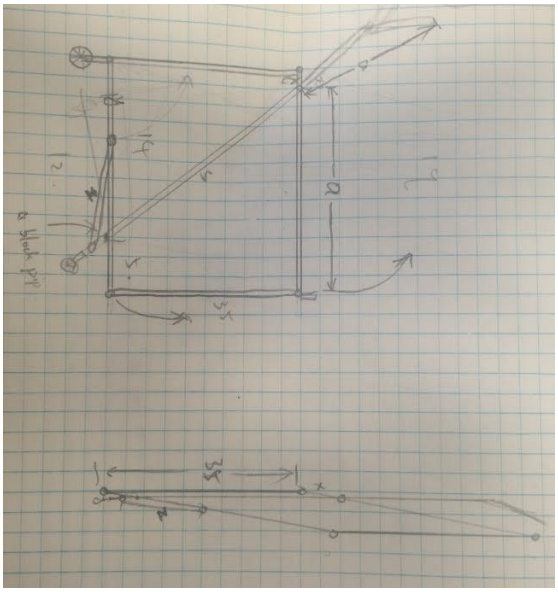

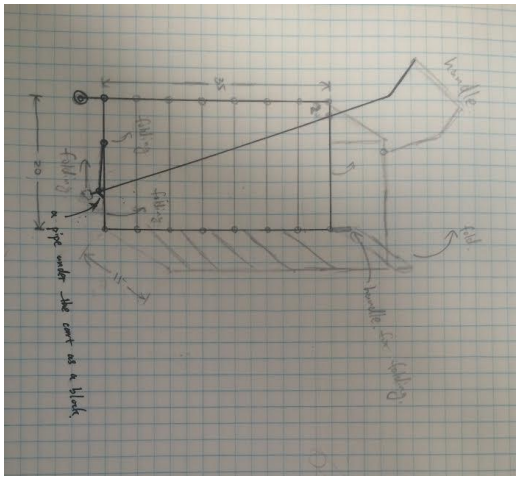

Final Design and Its Prototype:

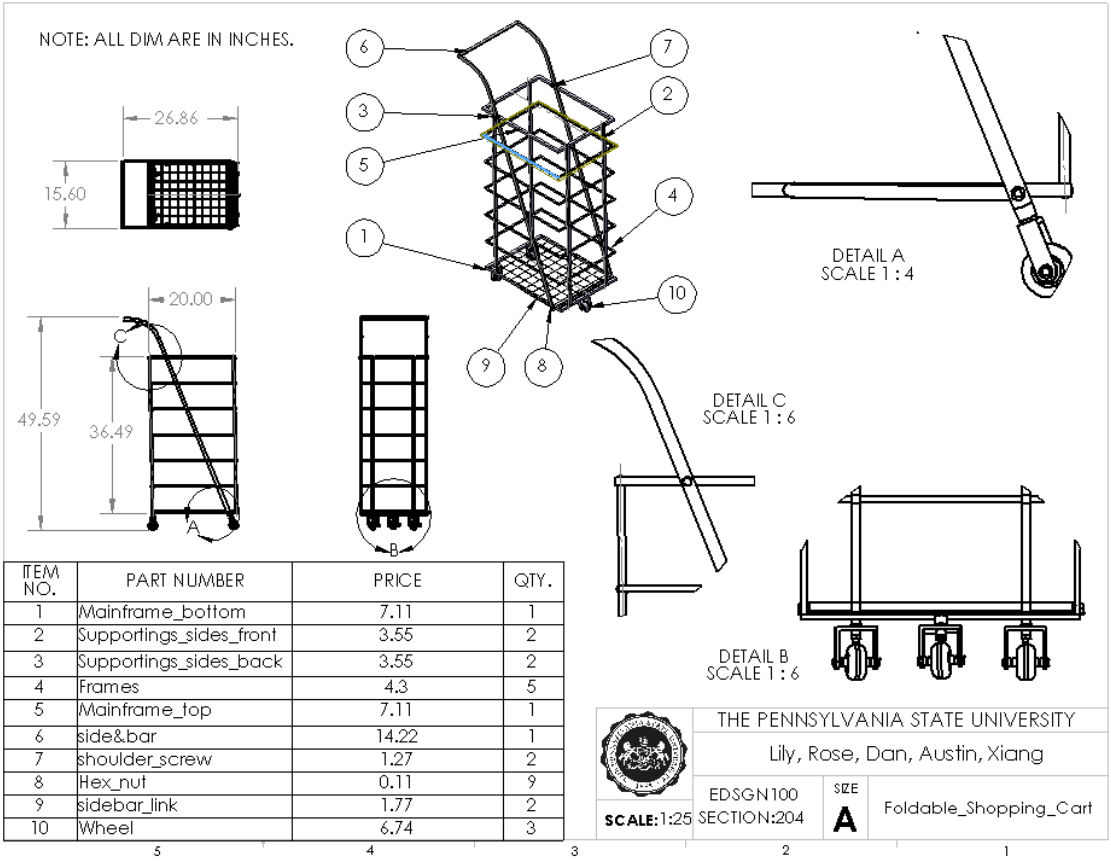

ITEM NO.	PART NUMBER	PRICE	QTY.
1	Mainframe_bottom	7.11	1
2	Supportings_sides_front	3.55	2
3	Supportings_sides_back	3.55	2
4	Frames	4.3	5
5	Mainframe_top	7.11	1
6	side&bar	14.22	1
7	shoulder_screw	1.27	2
8	Hex_nut	0.11	9
9	sidebar_link	1.77	2
10	Wheel	6.74	3

Detail Drawing 1 for the Bottom

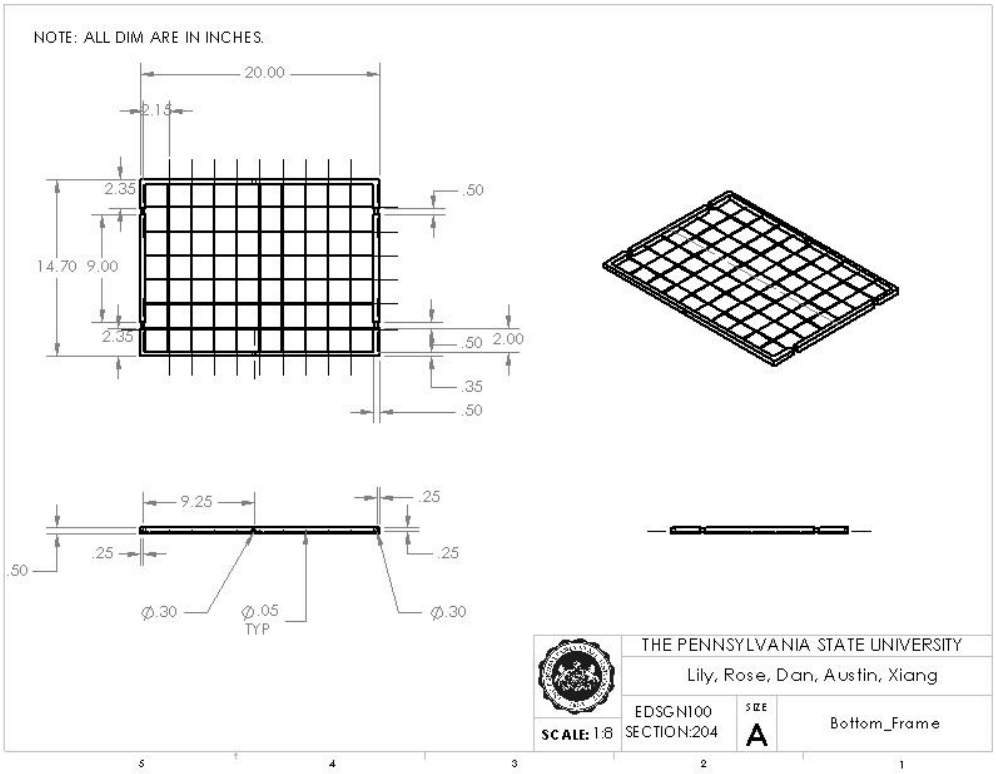

Detail Drawing 2 for Back Side Support

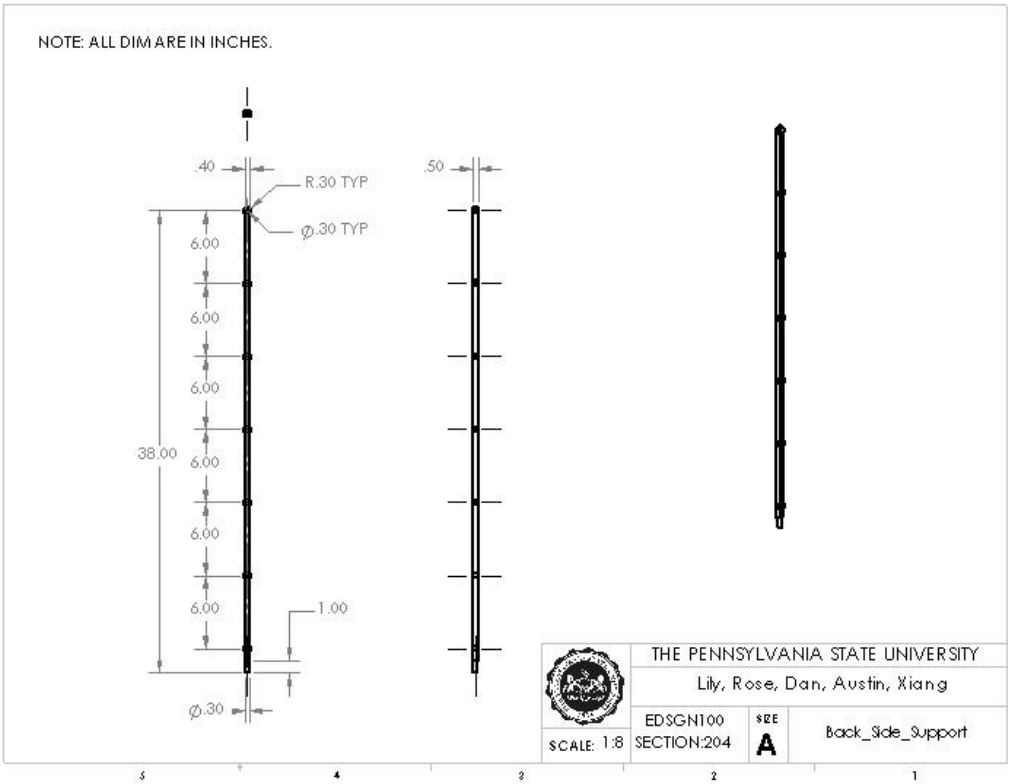

Detail Drawing for Sidebar-Bottom Link

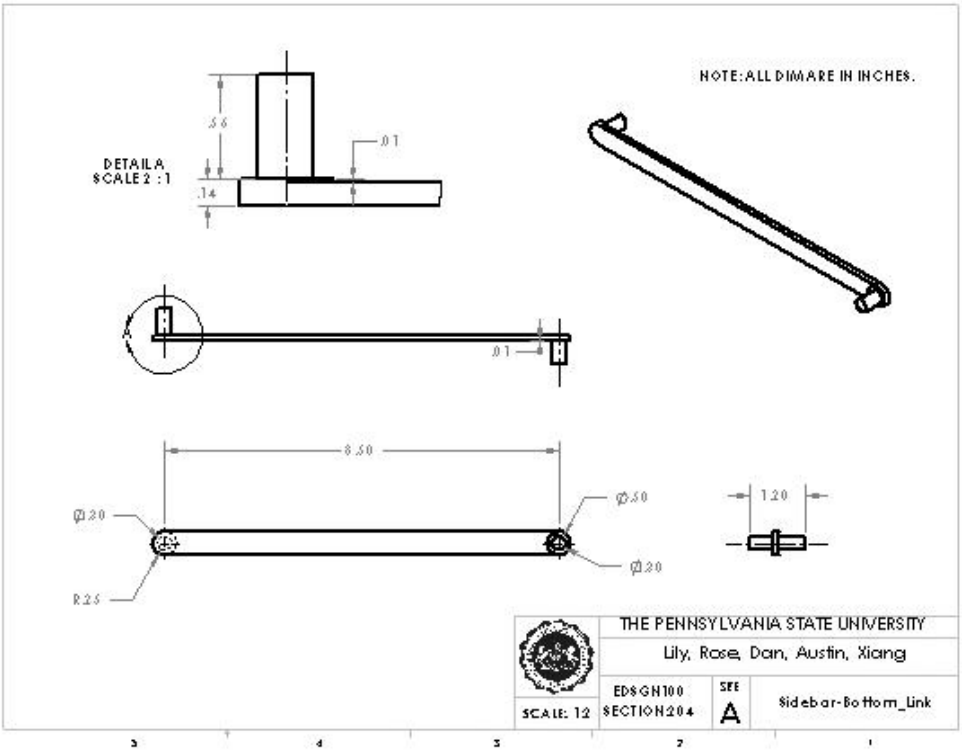

Prototype scale and a digital image(s) of your prototype
Prototype Scale: 1:2

Design features
Foldable cart with a removable leisure bag.
Three wheels for ease of maneuverability and climbing stairs.

Operation instructions
Pull front bar to fold.
Lift bag from center to carry separately.

Engineering Analysis:

Working Mechanism

The shopping cart was purposefully designed so that a leisure bag could be easily attached and removed from it. The bars along the sides of the cart help prevent any of the groceries from getting damaged by providing stability. The bottom was created to be able to take heavier the impact of the groceries. The cart is also designed to fold up and flatten when the bars are rotated. The three wheels give the shopping cart a plane to roll on while making it easier for people to transport it.

Cost Analysis:

Material	Usage	Cost	Source
8 ft length ½" diameter Hollow Aluminum Bars	Overall foundation of the cart. Used for the sides and the supportive base	12	http://www.metalsdepot.com/catalog_cart_view.php?msg=
2" Diameter Plastic Wheels	Wheels make it easy to transport	2.24	http://www.mcmaster.com/#standard-casters/=y8jw91
Hex Nuts/ Shoulder Screws	Keep rods connected	.11	http://www.mcmaster.com/#hex-nuts/=ycpvkk http://www.mcmaster.com/#shoulder-screws/=ycpxpl
¼" Hollow Aluminum Bars (Bottom Mainframe)	Created for supportive base		http://www.mcmaster.com/#aluminum-alloy-rods/=ycpshw
Frames	Keep leisure bag inside the cart	2.50	http://www.mcmaster.com/#aluminum-alloy-rods/=ycpshw

Conclusion:

In conclusion, our design portrayed good characteristics and specifications to be a successful foldable shopping cart with a detachable leisure bag. Our prototype did not portray our design as best as we wanted to. The design drawings show the foldable cart and all of its features best. The design was fairly simple, having three wheels, an aluminum cage exterior, and a detachable leisure bag. It is designed to fold well enough to fit into a small area like a closet, and the bag is able to be removed and used for other uses.