Personal CAD Project: Snowboard

Alexander Pistolas

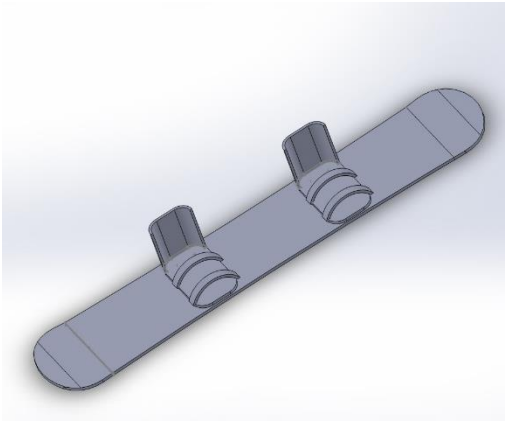

Figure 1

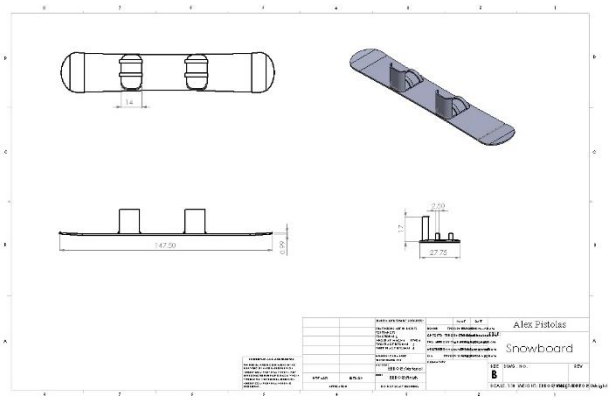

Figure 2

Figure 3

http://www.ridesportsusa.com/shop/media/catalog/product/cache/1/image/9df78eab33525d08d6e5fb8d27136e95/g/n/gnu-carbon-credit-btx-wide-snowboard-2013-front_1.jpg

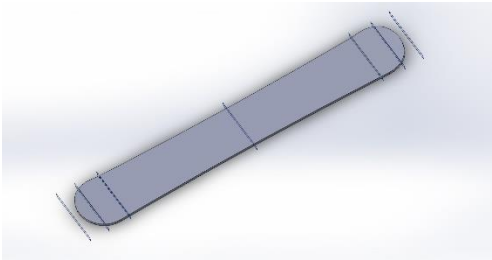

Figure 4

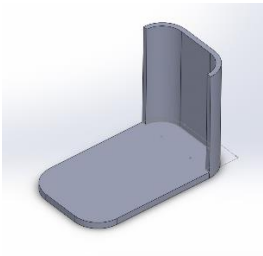

Figure 5

Figure 6

I chose to replicate a snowboard in SolidWorks because snowboarding is one of my favorite things to do in the winter. I designed my drawing to match my actual snowboard which is the GNU Carbon Credit pictured in Figure 3. I researched the specifications of this board such as the length, waist width, nose/tail width, and contact length to match the shape of the board as closely as I could. The bindings of the snowboard were made very simply because of the difficulty of real snowboard bindings. The whole snowboard consisted of three parts which included the snowboard deck (Figure 4), the bindings (Figure 5), and the straps (Figure 6). The most difficult part of the project was lofting the different planes of the snowboard deck so it would have a curved edge to match how the real snowboard looks. Lofting the deck also allowed me to give it "rocker" which is when a snowboard curves up near the nose and tail.