Project 2: The Green Project

Team : The Core Four

Name : Chee Hau Teoh (czt5227@psu.edu)

Andrew Nelson (ajn5224@psu.edu)

Lauren Nelson (len5083@psu.edu)

Ceillum O'Hare (cao5230@psu.edu)

Instructor : Dr. Bevin Etienne

Course : Introduction to Engineering Design (EDSGN100)

University : Pennsylvania State University

Department: Department of Engineering

Table of Contents

Introduction and Abstract: 3
Mission Statement: 4
Brainstorming: 5
Customer Needs Analysis: 6
External Research: 7-10
Benchmarking: 11
House of Quality: 12
Concept Generation: 13
Concept Selection and Scoring: 14-15
Final Design: 16
Economic Standpoint: 17
Conclusion: 18
References: 19

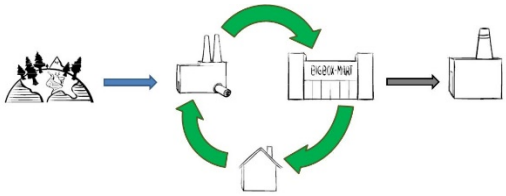

Introduction

In our second engineering design project, our partner will be ArcelorMittal USA, the largest steel producer in North America and the largest integrated steel producer in United States. ArcelorMittal is acknowledged as the leader in all of the major global steel market, and also the largest and most global steel company in the world by both of their revenue and production.

Abstract

Nowadays, the use of recycled steel has been part of the steel industry since the very beginning as oftentimes steel can be easily and efficiently recycled for other steel production. However, some byproducts such as refractory bricks, metal drums, totes, pallets and lumbers may not be recycled as easy as the used steel. Since day one, ArcelorMittal always emphasizes and espouses their company values of Sustainability, Quality and Leaderships. From the aspect of sustainability, reducing the amount of waste will significantly cut down the environmental footprint, disposal costs, and improving profitability also helping the long-term sustainability of business unit.

Year by year, the revenue of ArcelorMittal has been growing exponentially with the demand of steel in the world. The manufacturing and production of steel products will definitely consume a great amount of energy. Thus, this will explicitly increase the consumption of fuel for power generation. The huge impact of ecosystem and the depletion of natural resources cannot be ignored as well. Due to all of these factors, we would like to propose the implementation of waste-to-energy systems in helping ArcelorMittal to convert their waste into biomass power generation.

By researching on the biomass power generation, we find out the products from AllPowerLabs will have a great fit on removing 2 roll-off dumpsters of pallets per month. By grinding those pallets into woodchips, they will be used as the input for the Power Cube PC20 from AllPowerLabs. The estimated electricity energy production will be approximately 90000 kWh while the estimated heat energy generation will be 72000 kWh. Apart from the breakthrough price $1-2/ watt power generation from biomass, this project will help to reduce the environmental footprint and waste footprint of ArcelorMittal.

Mission Statement

- Our objective in this design project, as requested by ArcelorMittal, is to reduce their waste stream by designing an opportunity to reuse and recycle their largest sources of waste (pallets, empty drums or totes, and waste refractory brick)
- Our main focus is on biomass/biodiesel power generation.

Customer Statements	Customer Needs
ArcelorMittal will have an excess of about 400 pallets per month that demand reuse	The project will use the process of gasification to convert that pallet wood chips into power generation.
The solution must be economically viable, or generate revenue for the business	The project will cost less than $150,000
Connections to the steel plant location will need to be considered from the environment aspect	The project will keep the environment surrounding the Steelton plant sustainable, and reduce ArcelorMittal's environmental footprint
All safety standards and regulatory codes are needed to be satisfied	The solution must meet the United States' emissions standards, among other safety requirements

Brainstorming

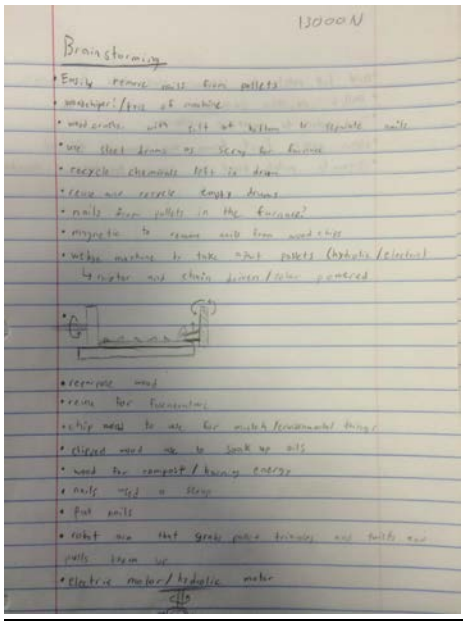

We had an innovative group when it came to brainstorming. We considered a variety of ideas to effectively recycle or dispose of ArcelorMittal's waste stream. These included removing the chemicals from the plastic drums to recycle them and converting the pallet wood into mulch.

Although our initial ideas would have met customer needs, we wanted to go above and beyond to fully benefit ArcelorMittal. Eventually, we comes out with the idea of biomass power generation system. Not only does this system eliminate the company's waste wood, but it produces energy in the form of heat and electrical energy.

Below are some of the examples of our brainstorming ideas:

- Biomass Power Generator
- Pallet Grinder
- Nail Separator
- Woodchips Storage
- Wedge Machine to separate the nail
- Pallet Pavilion
- Household Furniture
- Woodchips for the use of environmental treatment

Customer Needs

Customer Needs		
Number	**Need**	**Importance (5-1)**
1	Recycle or reuse waste materials	5
2	Recycle or dispose of refractory brick/plastic drums/wood pallets	5
3	Ensure that the solution satisfies relevant regulatory codes	4
4	Solution is economically efficient	3
5	Reduce ArcelorMittal's environmental footprint	3
6	Meet the standards of company stakeholders	3

Target Specifications

The system must cost a total of less than	$150,000
Grinder efficiency	250 pallets/ hour
Energy production (Annually)	80000 kWh
Heat Energy Production (Annually)	70,000 kWh

External Research

Gasification:

- Incomplete or staged combustion of solid fuels (ex: coal or wood)
- Gas that is output is still capable of being combusted (usually H_2 or CO)
- Five step process of thermal events to convert solid organic material to hydrocarbon gas

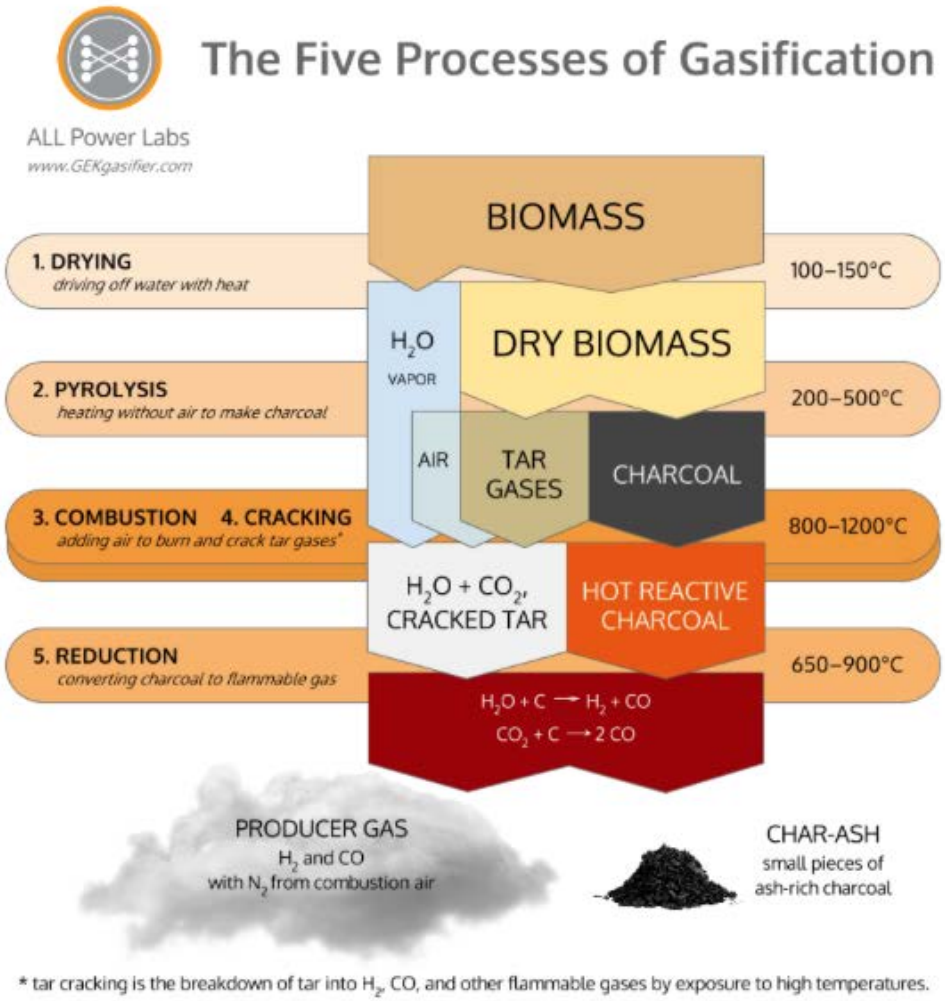

- Multiple types of gasifers, but for the purpose of our design project we will be using a updraft model

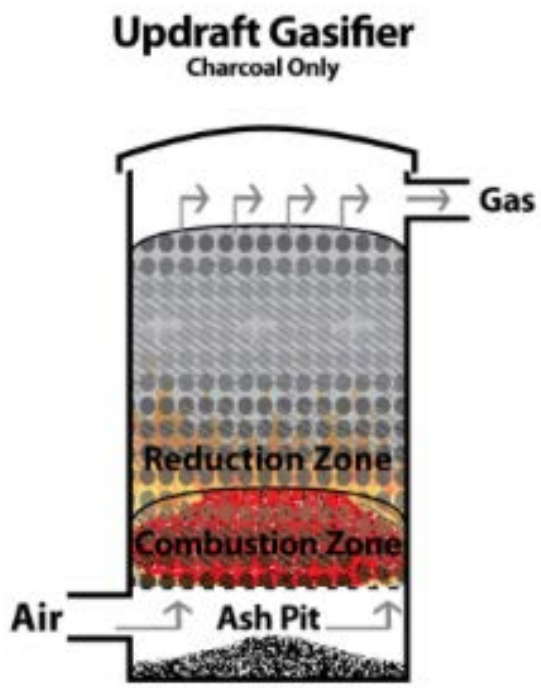

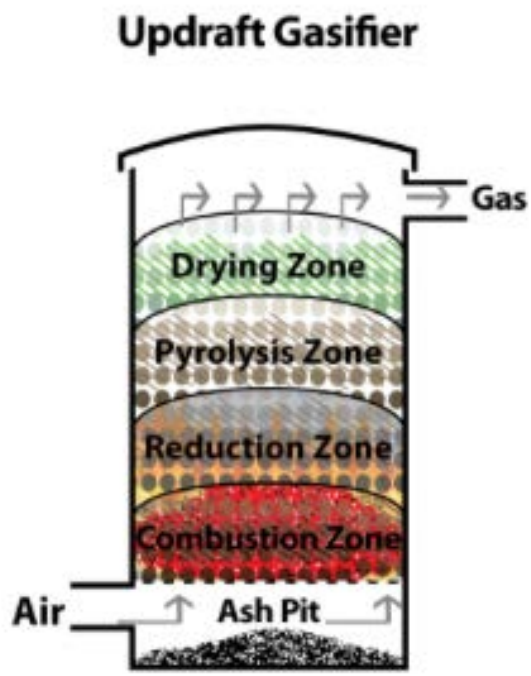

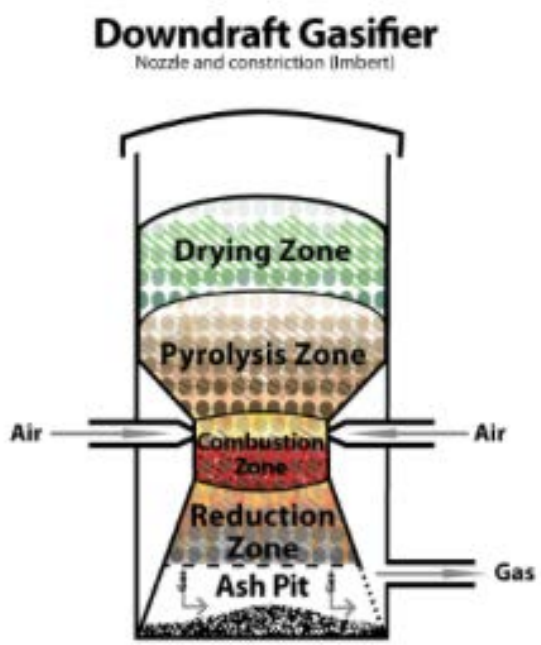

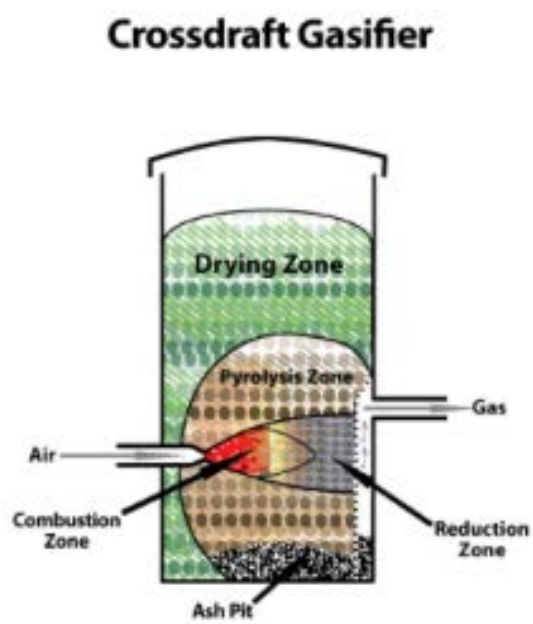

Maintenance Schedule

Maintenance is important in prolonging the lifespan of the products. A constant maintenance schedule will ensure the efficiency of the operation of the products, especially power cube. The technician level maintenance will need to be conducted by trained technician.

Grate Basket Maintenance

The grate basket plays an important role in the production of combustible gases. Hence, it must be maintained on a regular basis. Its main role is to contain a bed of hot charcoal to support reduction reactions. Secondly, it will separate char ash frp, the rest of the charcoal to maintain a good rate of gas flow.

Clinkers

Clinkers are formed when the ash of the feedstock fuses together to form a hard rock-like formation instead of remaining as dusty like ash. By using feedstocks with high ash content and high energy value, the formation of clinker will increase too. The other factors that will affect the formation of clinkers are gasifier temperatures and other operating parameters such as grate shaking and engine exhaust recycling rate. Hence, the grate will need to be checked after the first few runs to determine the clinker forming characteristics on the feedstocks.

Below is the recommended maintenance schedule:

Operator Level Tasks					Time required
Service Interval Hours:	20	62	125	500	
Service Interval Calendar (@7000hr/yr):	Daily	3 Days	Weekly	Monthly	
Pre-start Checks and Duties	✓				30 min
Grate Basket Maintenance		✓			30 min
Packed Bed Filter Maintenance (PP20 only)		✓			30 min
Cowling and Cyclone Air Cleaning			✓		45 min
Rotary Filter Maintenance (PP25 only)			✓		30 min
Unplanned Operator Attendance			✓		60 min
Sensor Calibration			✓		30 min
Engine Oil Change and Component Cleaning				✓	60 min

Manual Drying Bucket and Cyclone Cleaning				✓	120 min
Filtration System Maintenance (PP25 only)				✓	60 min
Flare Maintenance				✓	45 min

Technician Level Tasks					Time required
Service Interval Hours:	1750	3500	7000	14000	
Service Interval Calendar (@7000hr/yr):	3 Months	6 Months	Yearly	2 Years	
Air Lock Maintenance (PP25 only)	✓				30 min
Engine General Maintenance and Tune Up	✓				120 min
Replace O_2 Sensor	✓				30 min
Overhaul Gasifier		✓			180 min
Overhaul Hopper & Air Lock (PP25 only)		✓			60 min
Turbo Maintenance (PP25 only)		✓			30 min
Replace Gasifier & Rotary Filter (PP25 only)			✓		180 min
Overhaul Hopper			✓		45 min
Overhaul Flare			✓		30 min
Overhaul Engine			✓		180 min
Replace Engine				✓	480 min

Benchmarking

Biomass Power Generators:

Specifications\Products	Power Pallet	PC 20 Power Cube	Powertrainer
Power Output	18 kw/hour	18kw/hour	100kw/hour
Biomass consumption	50 lbs/ hour	50 lbs/ hour	220.5 lbs/hour
Moisture Tolerance	Up to 30%	10-30%	40%
Weight	2350 lbs	2590 lbs	N/A
Hopper capacity	85 gallons	85 gallons	2992 gallons
Cost	$44,590	$48,600	N/A
Grid-Tie System (optional)	Yes	Yes	Yes

Pallet Grinders:

Customer Need	Slow Speed RAM Grinder	Hog Erizer Grinder
Economically efficient	5	4
Separates nails	5	5
Grinder speed	3	5

House of quality

Legend		
⊙	Strong Relationship	9
O	Moderate Relationship	3
▲	Weak Relationship	1
++	Strong Positive Correlation	
+	Positive Correlation	
—	Negative Correlation	
▼	Strong Negative Correlation	
▼	Objective Is To Minimize	
▲	Objective Is To Maximize	
X	Objective Is To Hit Target	

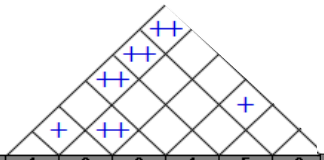

Row #	Max Relationship Value in Row	Relative Weight	Weight / Importance	Quality Characteristics (a.k.a. "Functional Requirements" or "Hows") / Demanded Quality (a.k.a. "Customer Requirements" or "Whats")	1 PC 20 Power Cube	2 Hog Erizer Grinder	3 Magnetic nail seperator	4 Grid tie system	5 Hopper Storage	6 Heat System	Competitive Analysis (0=Worst, 5=Best): PC 20 Power Cube	PP 20 Power Pallet	Power trainer	Hog Erizer Grinder	Slow Speed RAM Grinder
1	9	15.8	9.0	Ability to re-use or recycle waste materials.	⊙	⊙	O	▲	O	⊙	5	5	5	4	4
2	1	15.8	9.0	Recycle or dispose of refractory brick	▲	▲	▲	▲	▲	▲	0	0	0	0	0
3	3	15.8	9.0	Recycleor dispose of plastic totes/drums	▲	O	▲	▲	▲	▲	0	0	0	0	0
4	9	15.8	9.0	Recycle or dispose of wood pallets	⊙	⊙	⊙	▲	O	▲	5	5	5	5	3
5	9	14.0	8.0	Ensure that the solution satisfies relevant regulatory codes	⊙	⊙	⊙	⊙	⊙	⊙	5	5	5	5	5
6	9	10.5	6.0	Solution is economically efficient	⊙	⊙	⊙	⊙	⊙	⊙	4	5	2	4	5
7	9	12.3	7.0	Reduce carbon footprint/energy usage	⊙	⊙	▲	⊙	▲	⊙	4	3	4	0	0
8															
9															
10															
				Target or Limit Value	Generates 18 Kilowatts	Effectively grinds the wood pallets	Separates more than 90% of the nails	At least 70% energy efficient	Stores 20 tons of wood chips	Produces 35 Kilowatts					
				Difficulty (0=Easy to Accomplish, 10=Extremely	1	3	4	1	3	4					
				Max Relationship Value in Column	9	9	9	9	9	9					
				Weight / Importance	647.4	678.9	454.4	394.7	359.6	521.1					
				Relative Weight	21.2	22.2	14.9	12.9	11.8	17.0					

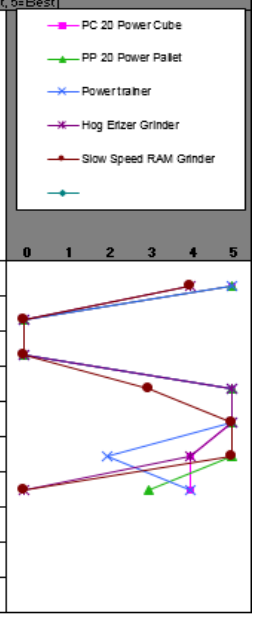

Powered by QFD Online (http://www.QFDOnline.com)

Concept Generation

Ranking	Idea	Dots
1	Biomass Power Generator	3
2	Pallet Grinder	3
3	Nail Separator	3
4	Woodchips Storage	3
5	Recycling Nails	3
6	Converting Pallet into Mulch	2
7	Wedge Machine	2
8	Woodchips for Oil Treatment	2
9	Electric Motor for Pulling nails	1
10	Hydrolic Motor	1
11	Pallet Pavilion Design	1
12	Categorizing Types of Pallets	1
13	Selling the Pallet	1
14	Woods for River Management	1

Concept Screening

Pallet Grinders:

Hammermill Pallet Grinder Concept Screening

No.	Selection Criteria	MP Series Slow Speed Ram Fed Grinder	"Hog"Erizer Pallet Grinder
1	Cost	-	-
2	Energy Use	+	-
3	Full Pallets?	-	+
4	Removes Nails?	+	+
5	Size	+	-
6	Speed	-	+
7	Durability	+	+
Sum of +'s		4	4
Sum of -'s		3	3
Sum of 0's		0	0
Net Score		1	1
Rank		1	1
Continue?		Yes	Yes

Biomass Power Generators:

BIOMASS POWER GENERATOER CONCEPT SCREENING

NO.	Selection Criteria	PC20 PowerCube	PP20 PowerPallet
1	Cost	-	-
2	Energy Use	+	+
3	Energy Production	+	+
4	Size	0	0
5	Speed	-	-
6	Durability	+	+
7	GridTie?	+	+
	SUM OF +'S	4	4
	SUM OF -'S	2	2
	SUM OF 0'S	1	1
	NET SCORE	2	2
	RANK	1	1
	CONTINUE?	Yes	Yes

Concept selection

Pallet Grinders:

Hammermill Pallet Grinder Concept Selection						
Grinder Type			MP Series Slow Speed Ram Fed Grinder		"Hog"Erizer Pallet Grinder	
No.	Selection Criteria	Weighting	Rating	Weighted Score	Rating	Weighted Score
1	Cost	15%	4	0.6	3	0.45
2	Energy Use	5%	4	0.2	3	0.15
3	Full Pallets?	40%	0	0	5	2
4	Removes Nails?	20%	5	1	5	1
5	Size	5%	3	0.15	2	0.1
6	Speed	10%	1	0.1	5	0.5
7	Durability	5%	4	0.2	4	0.2
Total Score			2.25		4.4	
Rating			2		1	
Continue?			No		Yes	

Biomass Power Generators:

Biomass Boiler Concept Scoring

Grinder Type			PC20 PowerCube		PP20 PowerPallet	
No.	Selection Criteria	Weighting	Rating	Weighted Score	Rating	Weighted Score
1	Cost	15%	3	0.45	4	0.6
2	Energy Use	5%	4	0.2	4	0.2
3	Energy Production	40%	4	1.6	3	1.2
4	Size	5%	4	0.2	4	0.2
5	Speed	10%	3	0.3	2	0.2
6	Durability	5%	4	0.2	4	0.2
7	GridTie?	20%	5	1	5	1
Total Score			3.95		3.6	
Rating			1		2	
Continue?			Yes		No	

Final Design

CAD Drawing on Solidworks

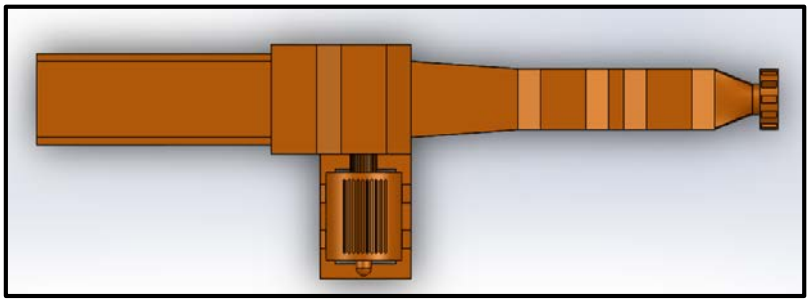

Top View

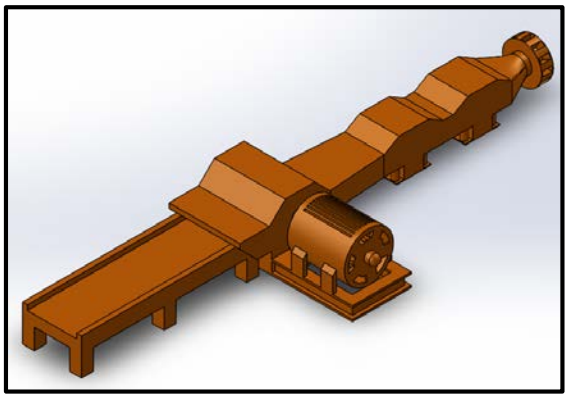

Isometric view

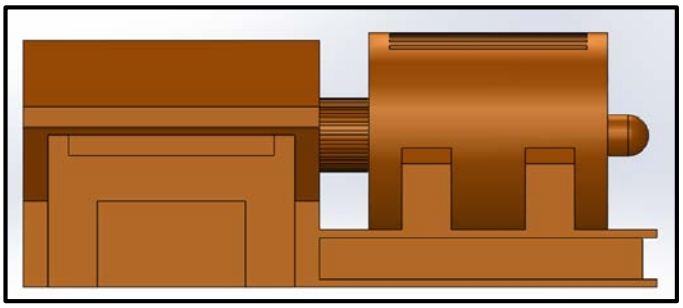

Front view

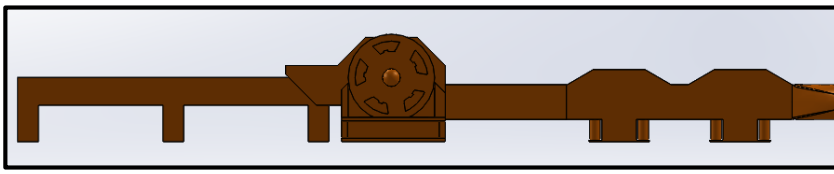

Side view

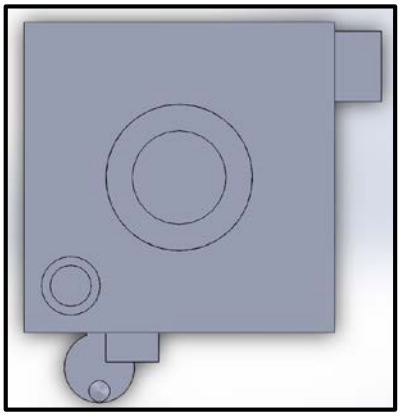

Top View

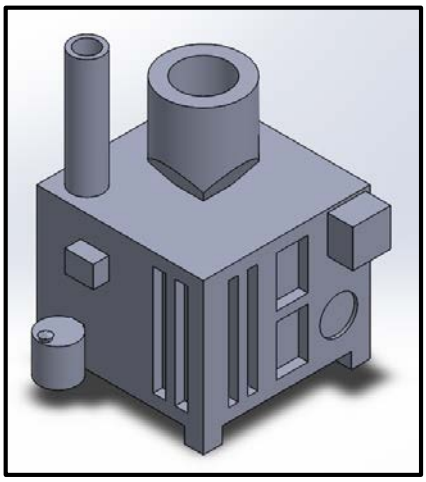

Isometric view

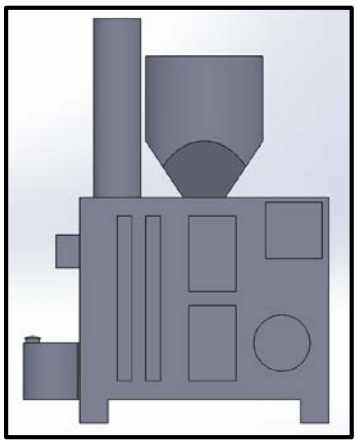

Front view

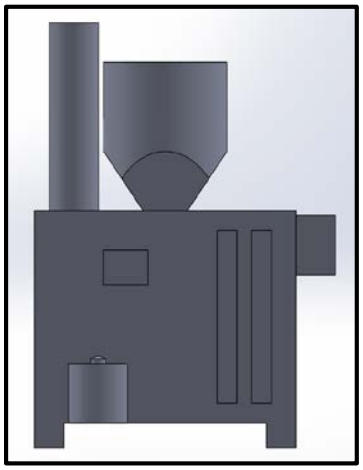

Side view

Economic Standpoint

Cost Calculation

Assumption:

- ArcelorMittal will have approximately 400 pallets with 50 lb each every month.
- The efficiency of PowerCube will be 18 kWh for electrical energy and 15 kWh for heat energy for every 50 lb woodchips consumption
- Power Cube will run 9 hours per day during the workdays
- "Hog" Erizer Pallet Grinder can grind 250 pallets per hour and automatically separate the nails from the pallets

No.	Products	Price	Quantity	Discount	Total
1	PC 20 Power Cube Grid Tie	$ 44000	2	9%	$ 80080
2	"Hog" Erizer Pallet Grinder	$ 30000	1	TBD	$ 30000
3	Hopper for Woodchips Storage	$ 15000	1	TBD	$ 15000
				Subtotal	$ 125080

Annual maintenance cost = $ 14000

*Estimated annual maintenance cost is calculated based on the standard payment for a professional technician which is $12 per hour. This will include the payment for the operation of the machine too.

Final Costs (Total: $139,080.00)

Energy Generation

Electrical Energy Generation: 18 kWh

Heat Energy Generation: 15 kWh

Total Generated Electrical Energy = **86400 kWh**

Total Generated Heat Energy = **72000 kWh**

*****the generated energy can be used for powering up the machine in the factory of ArcelorMittal. The energy use is solely based on ArcelorMittal's decision

Other Incentives and Certification

- There are some incentive that can factor in the calculation of initial cost
- Pennsylvania AEPS Alternative Energy Credit Program that acknowledges all the clean energy benefits of electricity generated from the company.

Conclusion

Researching and designing a solution to solve ArcelorMittal's waste products was a learning experience that was beneficial to every group members. This project helped us develop skills that professional engineers will need on a daily basis in future.

As a group, we utilized each individual's creativity to the fullest in order to come out a solution for our client, ArcelorMittal. During the brainstorming process, we came up with a variety of great ideas to optimize the use of waste for different kind of uses, ranging from charitable activities like environmental use to profitable business. We do understand that the efficiency of this products will be based on our customer's need and the amount of their waste that can be used as the fuel, mainly biomass. Hence, customers play an important role in this project a success too.

Once we narrowed down those ideas, we selected the most useful ideas to be implemented in our project. Our group had conducted research on comparing different methods to recycle the pallets and lumbers, including selling back to the company that recycles pallets and making household furniture for small business initially. However, we decided to reuse the pallets for power generation. We had also transferred both of the products into a lively design on SolidWorks that can show the whole process of producing electrical and heat energy from pallets.

After much revision, we had created a set up for the process of power generation by using pallets grinder and biomass power generator. We have met most of the criteria, and fulfilled the customer needs for recycling their waste. The one last thing will be our customer's interest to invest on this project. Overall, we consider the project a success, and have gained insights from finding out the best solution for our customer, ArceloMittal.

References

Biomass Power Generator:

http://www.allpowerlabs.com/products/20kw-power-pallets

Pallet Grinder:

http://www.hammermills.com/industries-served-schutte-buffalo-hammermill/wood-processing/pallets/hogerizer-pallet-and-pallet-scrap-grinders

Hopper:

https://www.bid-on-equipment.com/Item/205406~15-20+Ton+Drag+Chain+Hopper.htm#.VUAUhSFVikq

Incentive Research:

http://programs.dsireusa.org/system/program?state=PA

Maintenance Technician Salary:

http://www.payscale.com/research/US/Job=Maintenance_Technician/Hourly_Rate