OHIO Class SSBN

SolidWorks Project
December 12, 2014
Austin Malencia

For my CAD project, I was determined to create something that was technologically inspiring. As I racked my brain back and forth across multiple ideas, ranging from science fiction to futuristic cars and power plants, I decided to build something that will be an integral part of my life upon graduation. As a Navy ROTC midshipman, I chose to construct an OHIO Class SSBN submarine.

Figure 1: Isometric

Being in the Navy and going into nuclear engineering, I hope to one day take charge of a submarine, specifically an OHIO Class SSBN. I enjoyed doing this project because it not only helped me learn more about this amazing technological specimen, but it also helped me be able to differentiate different submarines from one another. Because of this project, I also gained a deeper appreciation for SolidWorks and desire to pursue more advanced skills with the program.

This project was rather long and tedious at times. In the end, the submarine was assembled from eight distinct parts. Most of the parts were rather simple to create, only consisting of a Boss Extrude or a Revolve. However, the hardest parts to construct were

the Main Hull Tube and the Propeller. These parts were difficult and I sought help to accurately recreate them. In the end though, the parts came together quite well.

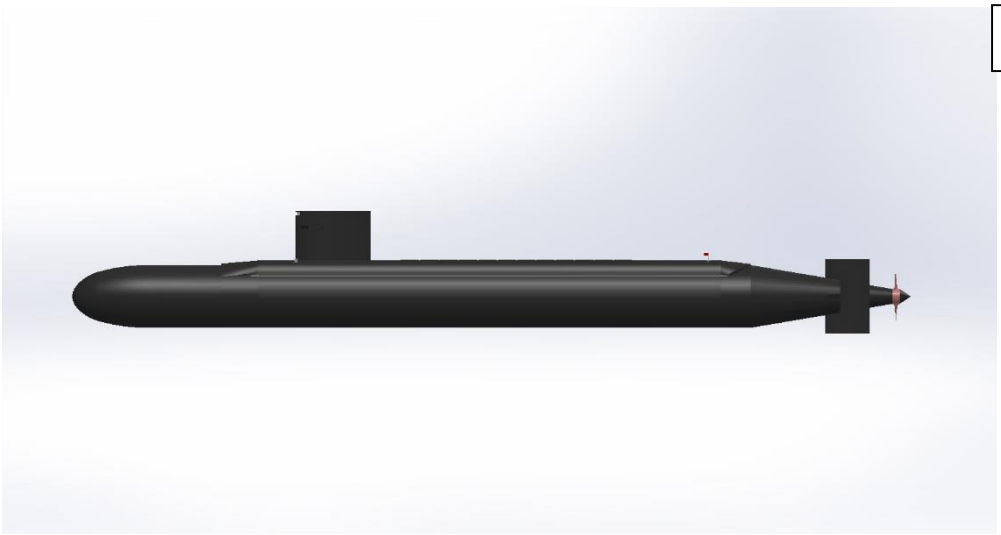

Figure 2: Right View

The Main Hull Tube was difficult for two main reasons: dimensioning and the bridge. Personally driven to make this model as size accurate as possible, I was hard pressed to find proper dimensions for the bridge and missile tubes. I was forced to scale picture models to size. Analyzing the dimensions was very time consuming. The bridge was difficult as well because it took several reference planes to properly make the wings.

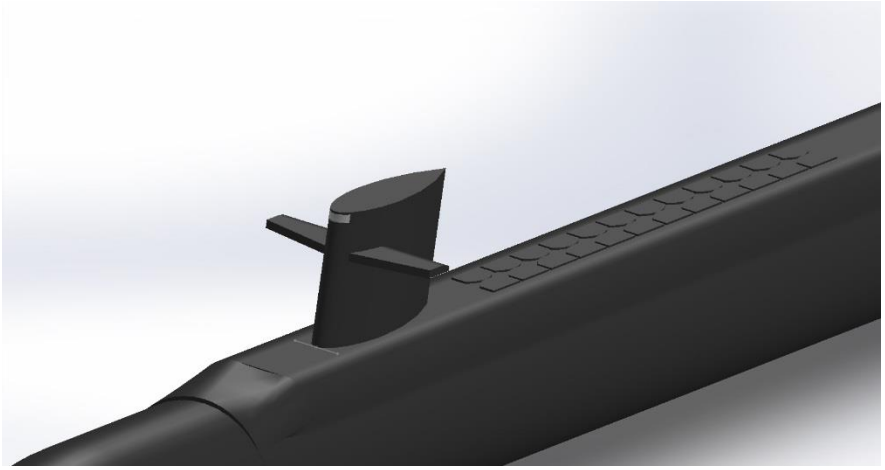

Figure 3: Zoom in of bridge

At first, I had no idea how to construct the Propeller. I finally found some advanced SolidWorks students to help me create a good Propeller. I created the propeller through

a few simple steps. Essentially, I created it by sketching a single blade, attaching it to a circular boss-extrude, flexing it, and then copying it across the circular boss extrude.

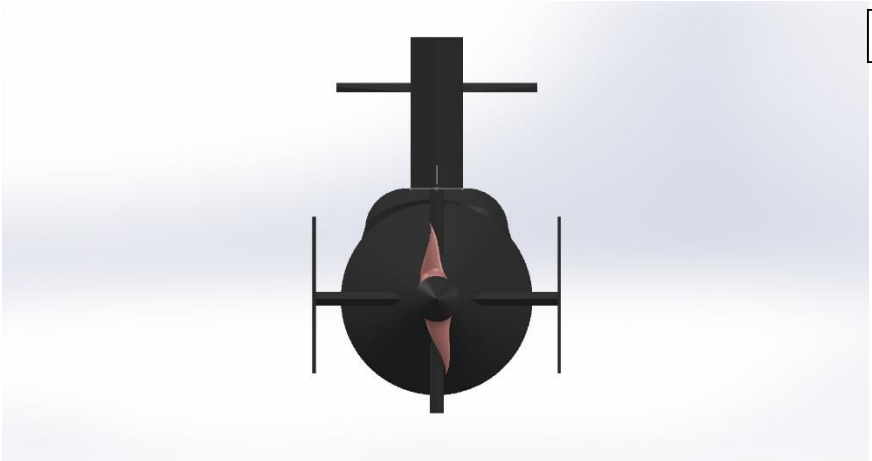

Figure 5: Back view and propeller

This project helped me gain a deeper appreciation of the utility of SolidWorks. SolidWorks is incredibly useful in visualizing different ideas and pieces of technology. SolidWorks is useful in seeing how different systems work using motion studies. Overall, the CAD project was a fun and satisfying project.

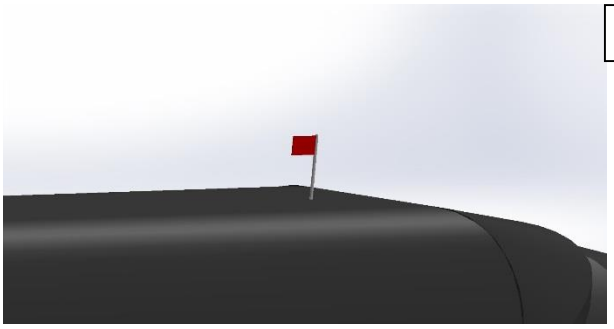

Figure 6: Close up of flag

Figure 7: Picture used to help make my project[1]

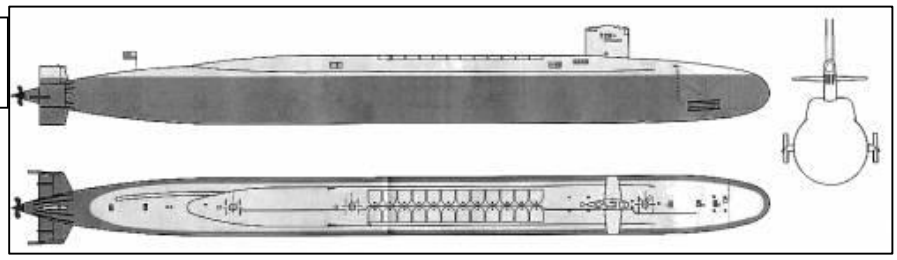

*Sources Used: 1. http://www.the-blueprints.com/blueprints/ships/submarines-us/17895/view/uss_ssbn-726_ohio/

2. http://www.robse.dk/pages/SSBN/HullGene.asp

3. http://www.naval-technology.com/projects/ohio/
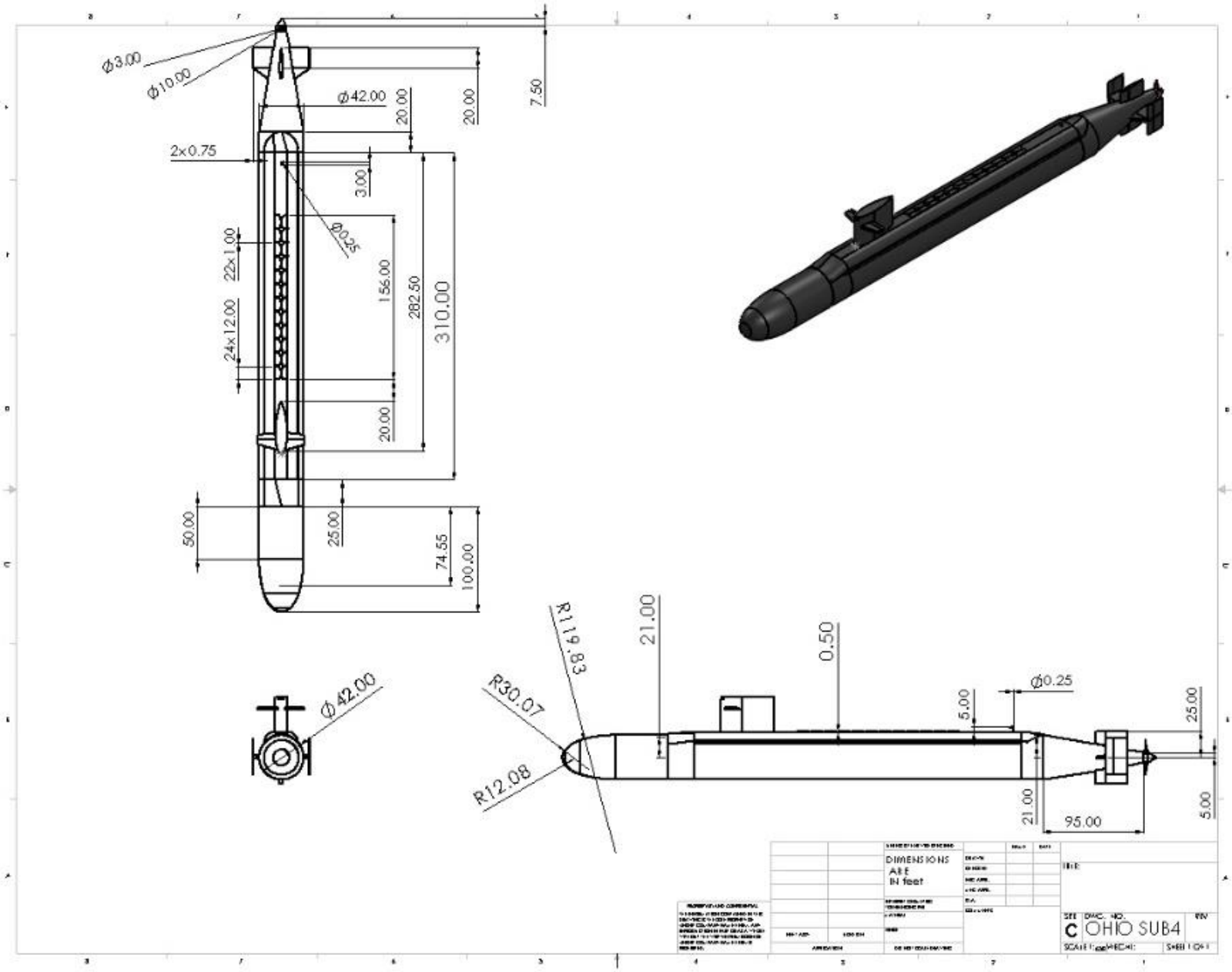
Figure 8: Final dimensions of project; dimensions are in feet