Engineering CAD (Solidworks)

This semester at Penn State, I learned how to the importance of 3D modeling objects via soft wares such as CAD or Solidworks. The programming has unique features such as parts, assemblies, and drawing.

Part

Models are built from 2D sketches and then a command such as an extrusion, revolve, loft, etc. leads to the drawing becoming a 3D object.

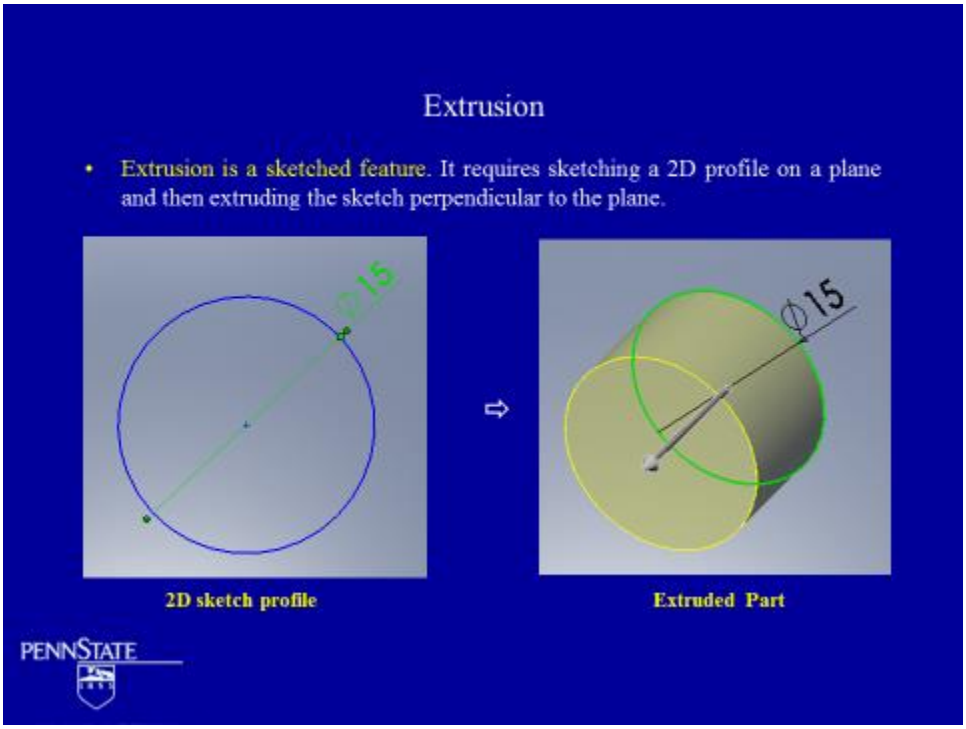

Here is a picture of a part that I assembled in Solidworks. It's a leg to a table.

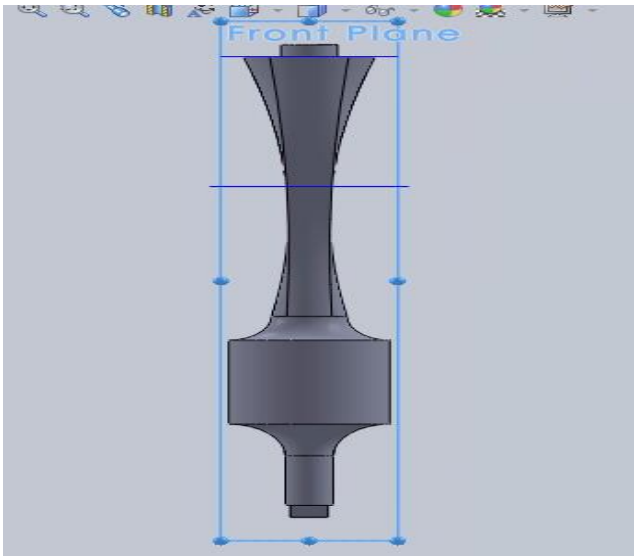

Mating of Parts within an Assembly

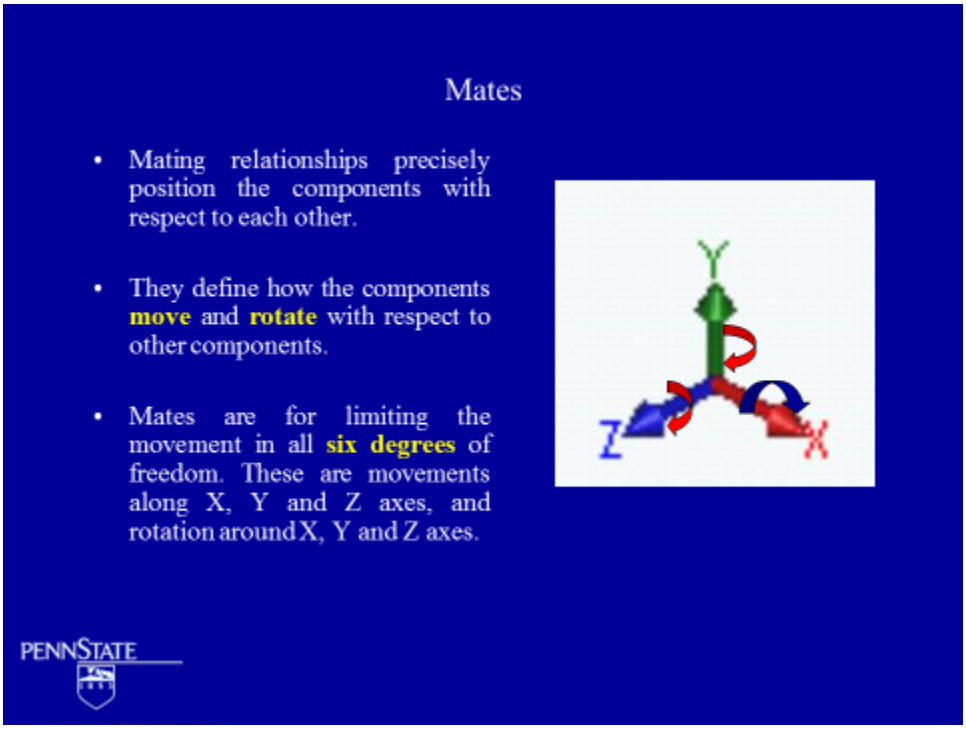

We then had to make assemblies which allowed for a whole bunch of parts to be attached together. Here is a picture of an assembly of an engine made up these parts: an engine case, a crank, a piston, and a rod. They were set up in such a way with the mates that the crank rotates when the rod is turned and the piston moves as a result of this.

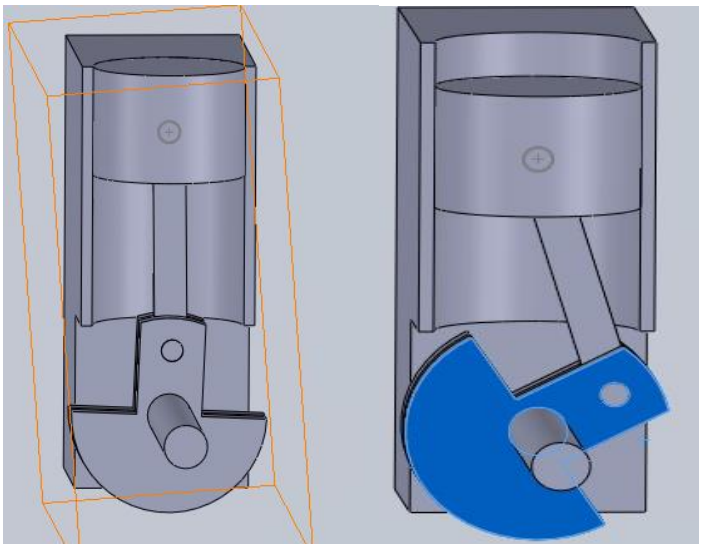

Drawing: Where we took the View of an Assembly and put it into a Multi-View format.

Here is an example of the engine put into the Multi-Views via the Drawing section of SolidWorks

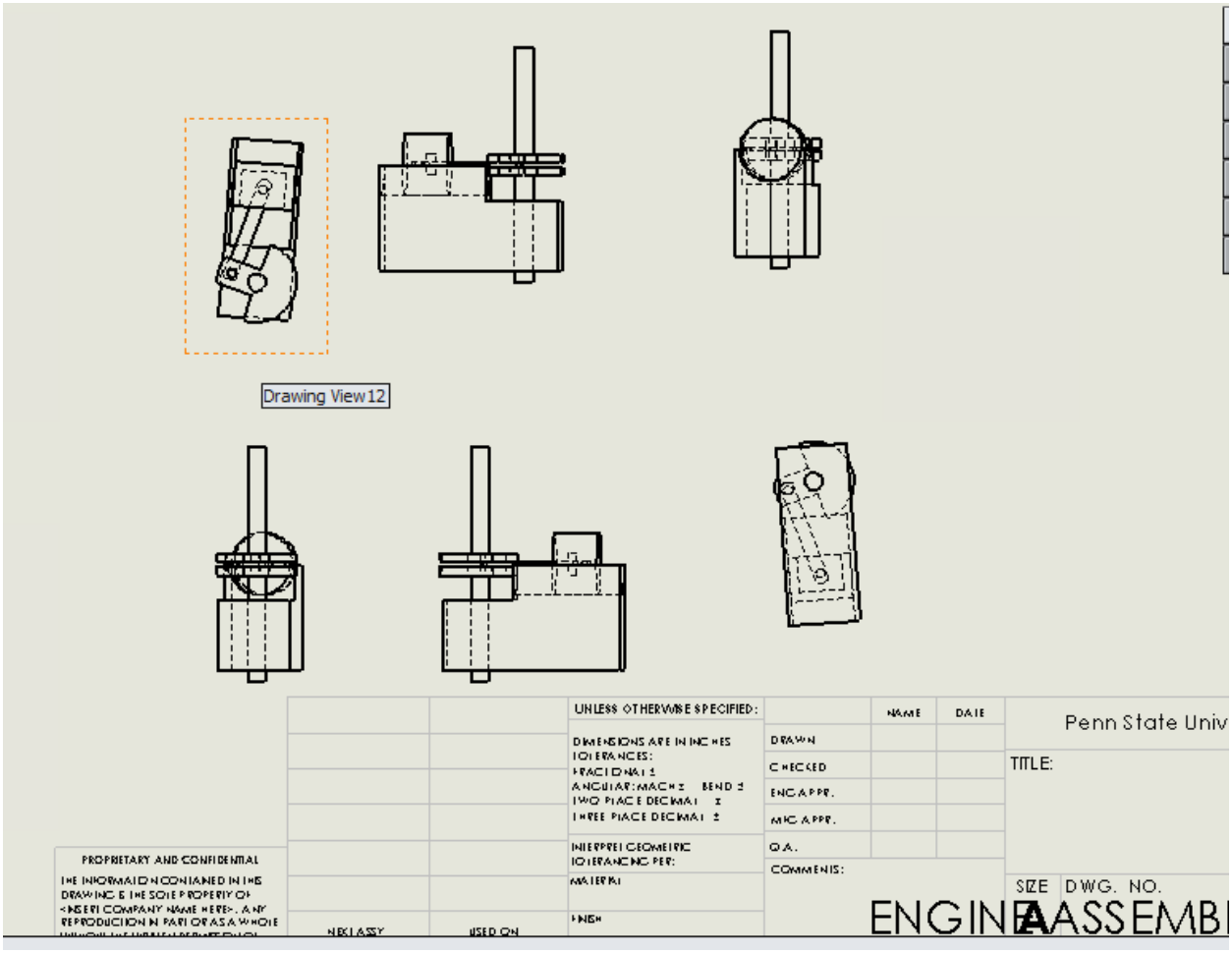

Important to Dimension Drawings

Here is an example in which I took an assembly of a Grandfather clock and used the Drawing feature to put the clock into the three main Multi-Views and dimensioned it.

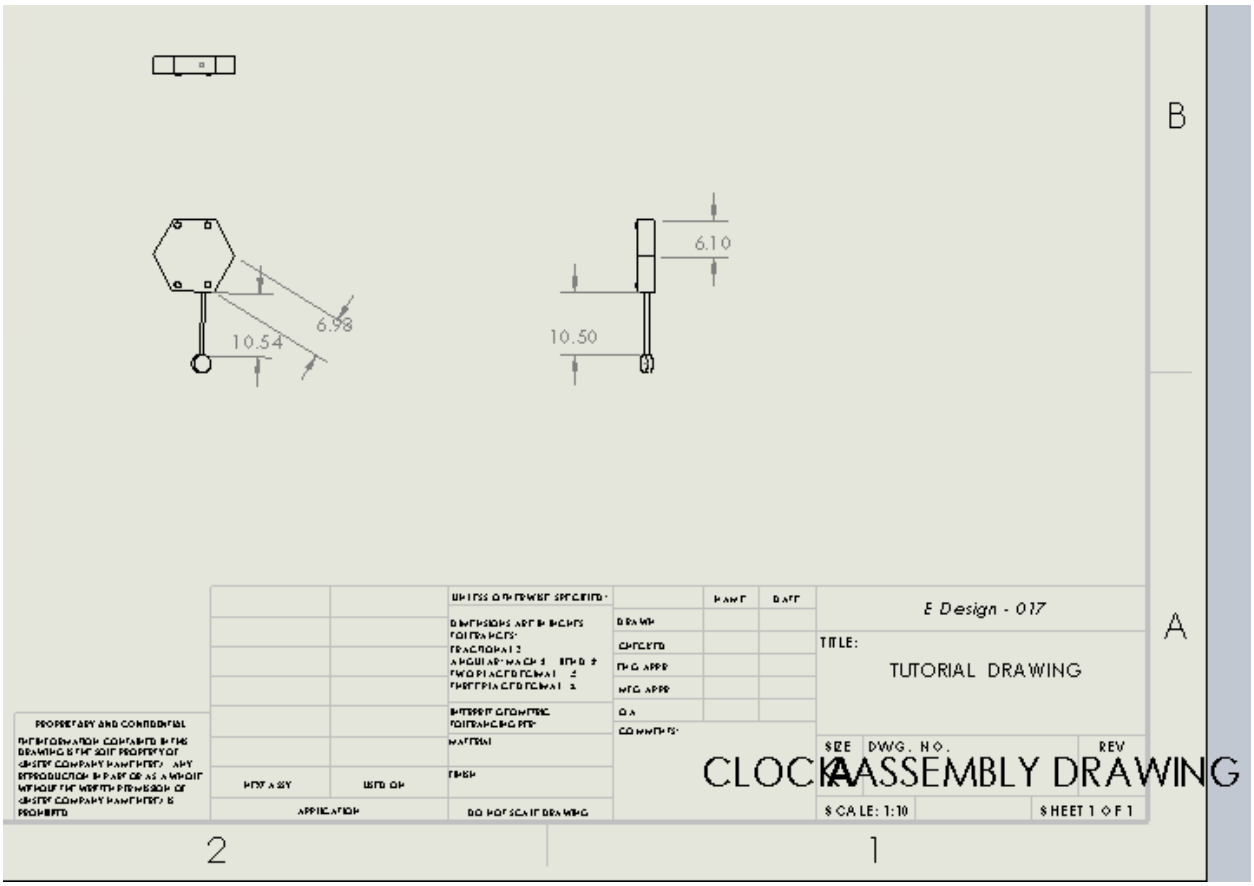
6.10
10.50
6.98
10.54
B
A
E Design - 017
TITLE:
TUTORIAL DRAWING
CLOCK ASSEMBLY DRAWING
SIZE
DWG. NO.
REV
A
SCALE: 1:10
SHEET 1 OF 1
PROPRIETARY AND CONFIDENTIAL
NEXT ASSY
USED ON
APPLICATION
DO NOT SCALE DRAWING
DRAWN
CHECKED
ENG APPR
MFG APPR
Q.A
COMMENTS:
NAME
DATE
MATERIAL
FINISH
2
1