The EcoBottle

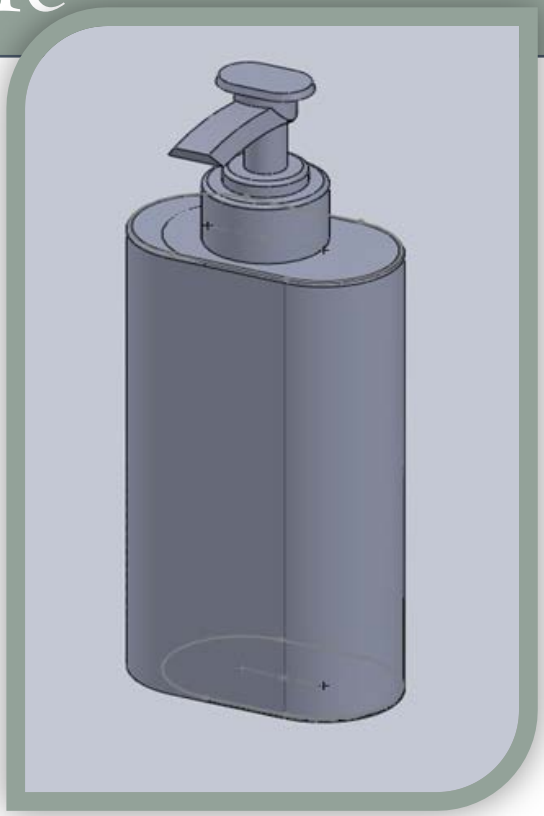

Client: ALCOA
Team 2
Aleksandra Jurgowska-Report Lead, Quad Chart Lead
Matthew Dorshimer-Prototype/Mode Lead
Maura Campbell-Brochure Lead
Alan Hsu-Costing Lead

EDSGN1000.012
December 7, 2013
Project Website:
http://sedtapp.psu.edu/design/design_projects/edsgn100/fa13/

Out with the old, in with the new:
Many of the current shampoo and condition bottles are made from plastic. However, recycling plastic is not economically-friendly, time-effective, or energy efficient. Team 2 of EDSGN100.012 came up with a solution that compliments Penn State and Alcoa sustainability efforts! Aluminum is not only friendlier to the environment, but it is also cost-effective and takes less time for the recycled product to return back to the store shelves when compared to plastic. The cost of the aluminum shampoo/conditioner bottle is about $0.174 per bottle, and can be handled in Penn State's current recycling program. Shifting to aluminum-based bottles for shampoo and conditioners could create a global market of approximately a billion units per year.

Table of Contents

Table of Contents**Error! Bookmark not defined.**

Introduction 1

Concept Development**Error! Bookmark not defined.**

Detailed Concept Development**Error! Bookmark not defined.**

Conclusions 8

Appendix..... 9

References.....10

Introduction

The company Alcoa gave us a topic regarding sustainability, which is a concept of the principle of using and preserving resources for the well-being of the environment and the present and future generations. The company wanted us to replace or build a product using aluminum that would not only benefit Penn State University, but perhaps be influential on a larger scale.

Aluminum has many beneficial physical and chemical properties. Recycling aluminum takes 95% less energy than using virgin aluminum and it only takes about 60 days to return on the store shelves after being recycled. These facts were taken into consideration for this project: they meet the qualifications of sustainability. The team decided to replace plastic shampoo and conditioner bottles with aluminum bottles to not only be more environmentally friendly, but also to save money and energy resources.

Concept Development:

Choosing between concepts was perhaps the most difficult task. A design selection matrix was used to choose between aluminum shampoo/conditioner bottles, aluminum to-go food containers and aluminum-shelled pen and pencils. After scoring each concept based on many categories the team felt were the most important, the aluminum shampoo bottle concept was chosen since it received the highest ratings (lowest cost to make, easiest recycling accessibility, highest chance of recycling, best impact on people and the environment, and largest student buy-in). Lastly, to find out more about recycling in Penn State and how enthusiastic the students felt about recycling and aluminum products, the team conducted a survey among the Penn State students. The results were very helpful: the majority of the surveyed recognized aluminum recycling and would buy aluminum shampoo/conditioner bottles. The survey confirmed the team's hopes for the project.

Detailed Concept Development

Once the aluminum shampoo/conditioner bottle concept was chosen and named the EcoBottle, the goal was to develop a design that would be successful. Because the bottle is composed of aluminum, the standard squeeze to release shampoo/conditioner was not an option because the bottle would not return to its initial shape. To solve this issue, the aluminum bottle could have a design with a twistable cap where you pour out the shampoo/conditioner or a design with a squirtable dispenser. Because of the viscosity of the shampoo/conditioner, the cap design would leave too much substance wasted while the dispenser design would not. The bottle also had to have wall thickness greater than a soda can (0.02 in.) in order to have a sturdy structure and be puncture resistant. Any thickness less than this would not allow it to hold together under daily use.

A slot design, where the bottle has straight sides joined by half-circle ends, was chosen based on its form fitting structure. Another concept, an elliptical shaped bottle stores easier than their circular counterparts due to having two sides that are more flat. The dispenser top is a standard plastic dispenser used to dispense the shampoo/conditioner, nut with the requirement that the dispenser is from readily recyclable plastics such as code 1 or 2.

The aluminum portion of the bottle is a slot design that can be seen in Figures 1 - 3. The shape is the result of taking a circle and separating the two halves by a certain distance. The plastic dispenser is a design of two circular bases on top of the aluminum shell with a curved dispenser. A tube leads from the bottom of the bottle to the curved dispenser. The dimensions are listed in Figures 4, 5, 6, and 7. There was a slot shaped button similar to the shape of the bottle placed on the top so a finger can easily press down and release the shampoo/conditioner.

Costing (using data from aluminum shell in SolidWorks):

First Cost:

1. New manufacturing machine: $75,250
2. The cost for design an engineer: $6000/month

Annual Cost:

Cost of energy to produce one can: 1.2KWH

Cost of electricity: $0.12/KWH

Material Cost:

Cost of an aluminum bottle: 0.03 US dollars

Figure 1: Bottle overall dimensions

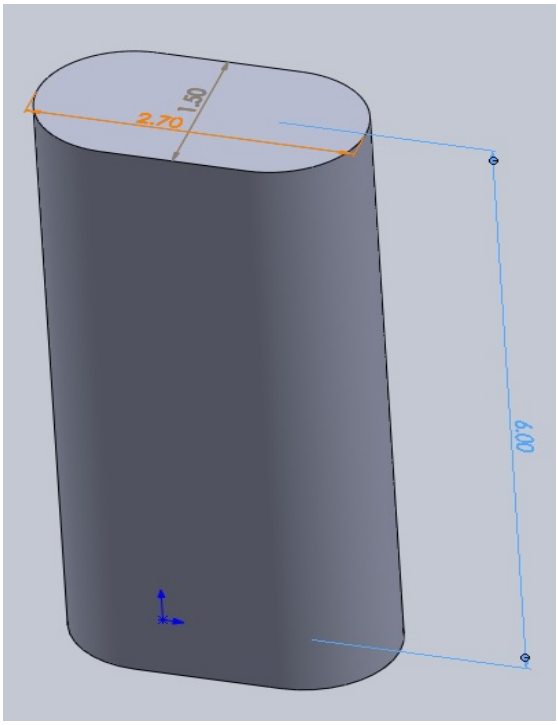

Figure 2: Isometric View of Whole Bottle

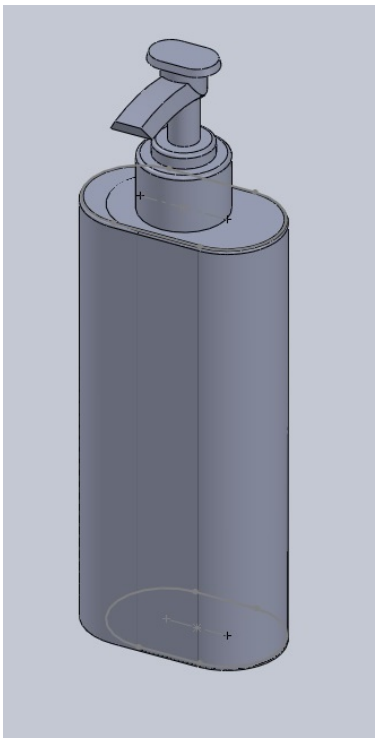

Figure 3: (shell)

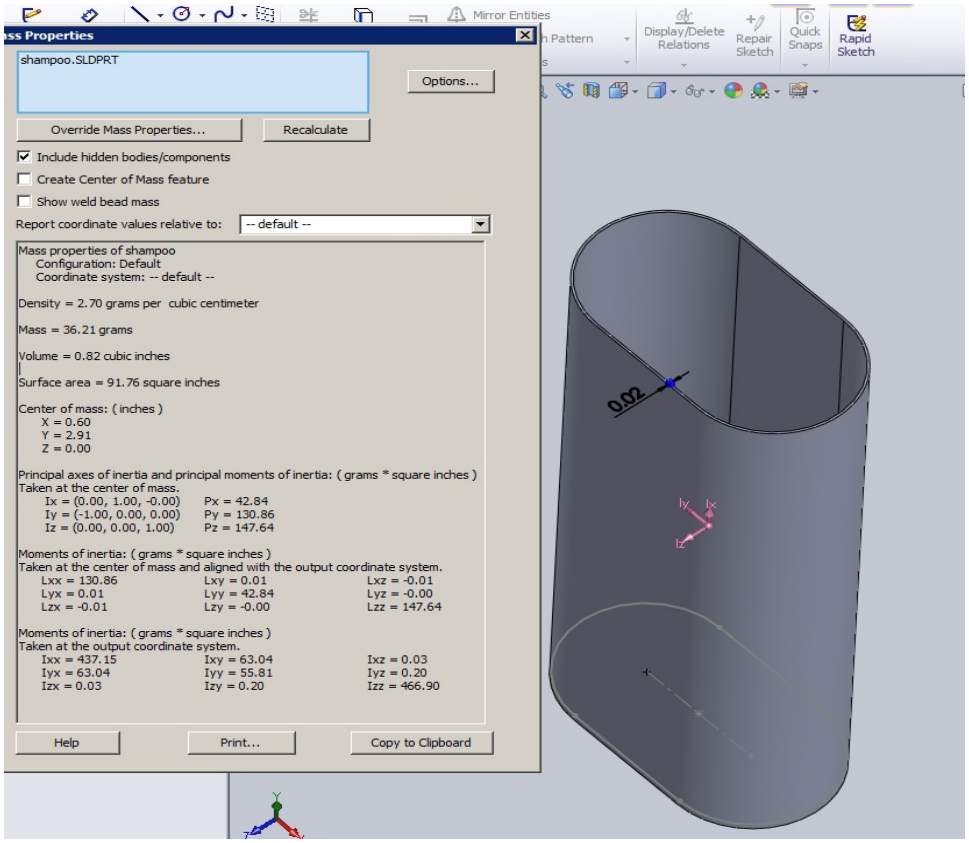

Plastic Dispenser dimensions: (See Figures 4, 5, and 6.)
1st Circular Base Diameter: 1.08 in.
Second Circular Base Diameter: 0.70 in.
Tube Diameter: 0.40 in.
Circular Top Diameter: 0.58 in.
Length of Nozzle: 0.44 in.

Figure 4: Plastic Dispenser Dimensions

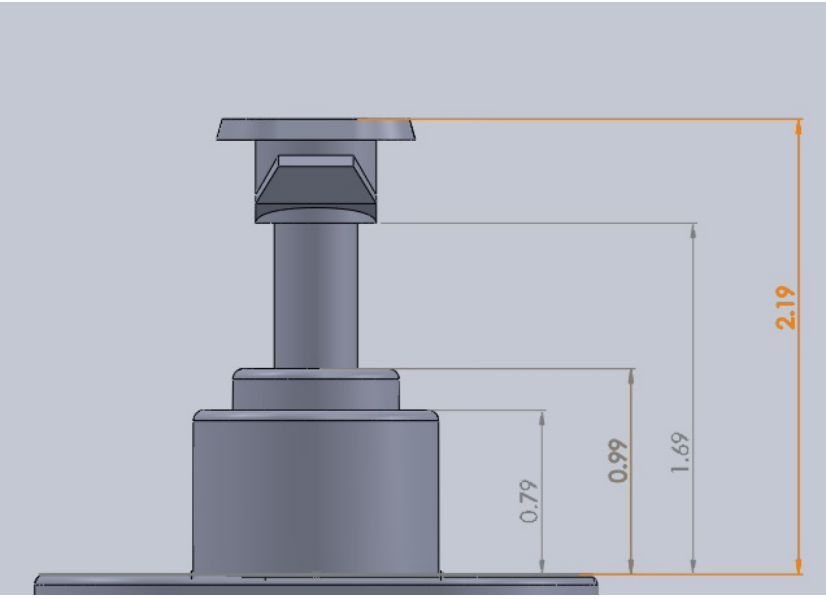

Figure 5: Details of Dispenser Nozzle

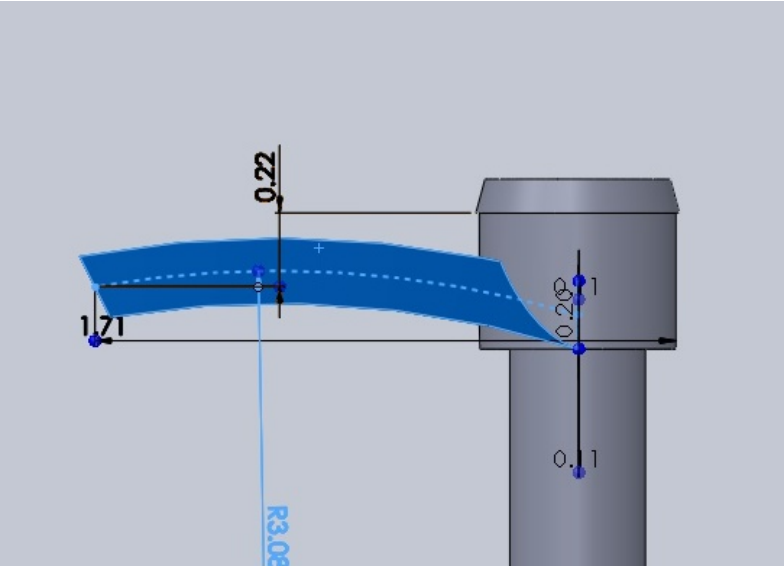

Figure 6: Details of dispenser top

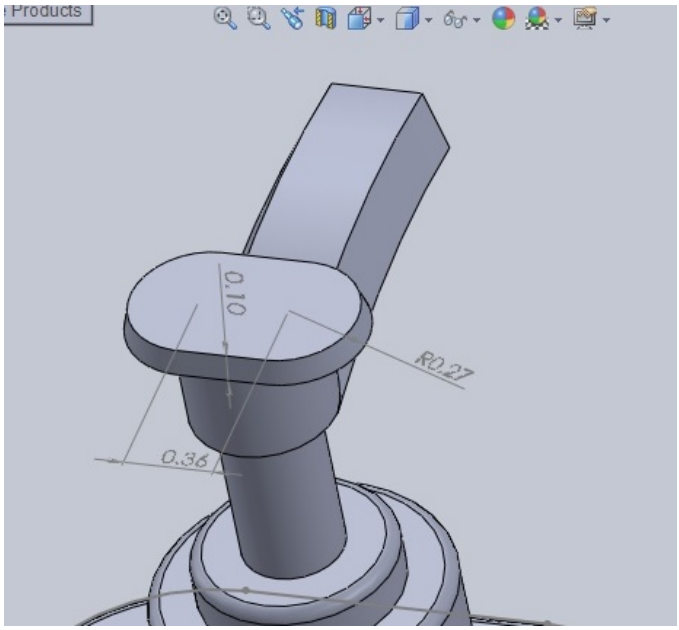

Top Finger Slot Dimensions: Figure 7
0.36 in. inner length with semicircles of radius 0.27 in.
Height: 0.10 in.

Figure 7: Details of dispenser assembled with aluminum bottle

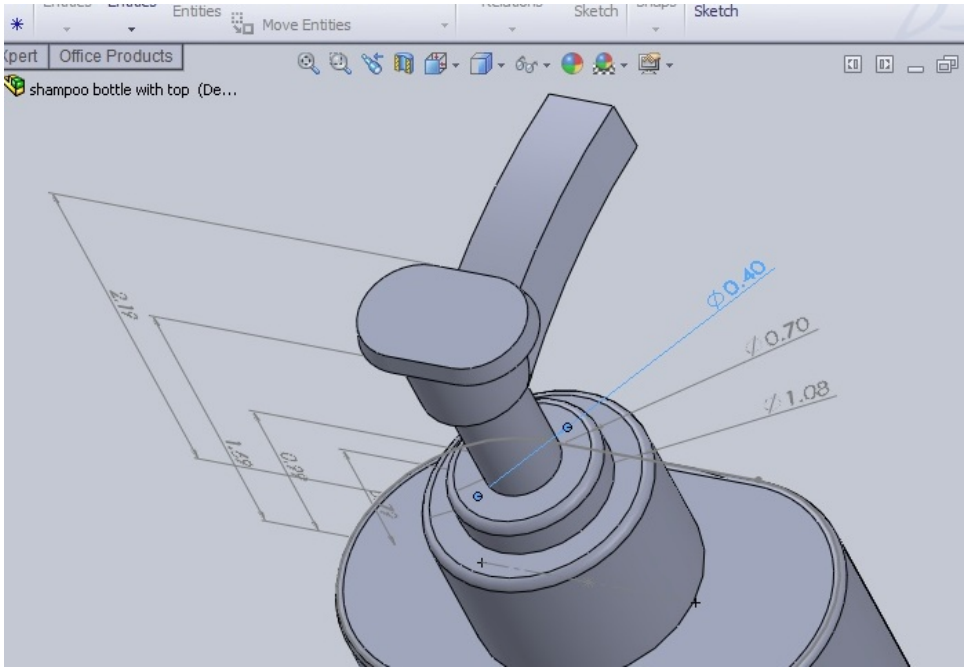

Conclusions:

Our team defined Sustainability as the principle of using and preserving resources for the well-being of the environment and present and future generations. To improve sustainability, our team designed the EcoBottle, a shampoo and/or conditioner bottle composed of aluminum instead of plastic. The reasoning behind this idea is that aluminum recycling is much more efficient and reasonable than plastic recycling. It only takes approximately 60 days for a recycled aluminum product to be remodeled into a new product and to be placed back on store shelves.

Our vision stemmed mainly from the idea that the team could develop a product concept that could help millions of people be more ecologically friendly and receive a great buy-in. The survey our team conducted showed that most people would recycle these aluminum bottles. Since hundreds of millions of people use shampoo and conditioner, this product (if purchased and properly recycled) could greatly improve aluminum recycling and sustainability. A few other benefits of the EcoBottle are that it costs only $0.174 to produce (sum of material and energy costs per aluminum bottle), this bottle was designed in a practical way for consumers (not much difference in size compared to standard plastic shampoo/conditioner bottles), and consumers who recycle this product can receive money for participating in aluminum recycling. While the price of the EcoBottle will be higher than standard plastic bottles, purchasing the EcoBottle allows consumers to contribute in aluminum recycling, which rewards participants who collect aluminum, such as Penn State and municipalities, through payment. Therefore this product is appealing to consumers, along with shampoo and conditioner manufacturers due to the bottle's affordable production price and positive "eco-image" for the companies. The main focus of our team's goal was to create a product that compliments Penn State and Alcoa's sustainability efforts by incorporating energy and resource conservation. The EcoBottle is a reliable and practical product that can successfully reach this goal.

Appendix:

Aluminum shell dimensions: (See figures 1, 2, and 3.)
W: 2.70 in.
L: 1.50 in.
H: 6.00 in.
Volume: 0.82 cubic inches: 13.5 mL
Mass = 36.21 grams

References:

1. "Facts About Aluminum." *LiveScience.com*. N.p., n.d. Web. 05 Dec. 2013.
2. "In-Depth Information/Recycling Process." *Aluminum*. N.p., n.d. Web. 08 Dec. 2013.
3. "Alcoa: Recycling: Recycling Toolkit: How Much Can I Earn?" *Alcoa: Recycling: Recycling Toolkit: How Much Can I Earn?* N.p., n.d. Web. 08 Dec. 2013
4. "3D CAD Design Software SolidWorks." *3D CAD Design Software SolidWorks*. N.p., n.d. Web. 05 Dec. 2013.