EDSGN 100

Introduction to Engineering Design

Section 202: Group 1

Submitted by:

1. Stanley Rhau
2. Bill Brant
3. Aizat Afiq Mohammad
4. Hunter Stuyvesant
5. Nakul Grover

Submitted to: Xinli Wu

Summer 2015

Abstract

The purpose of this design project is to construct a dumpling maker that is compact, dishwasher safe, and produces at least ten dumplings per minute. In order to satisfy these requirements, five unique designs were constructed to evaluate which would be the best, most cost-effective design. The chosen design is referred to as the *Easy-Does-It*.

Table of Contents

Cover Page (hws5264@psu.edu)…… i

Abstract (wab5086@psu.edu)…… ii

Table of Contents (abm5403@psu.edu)…….... iii

Introduction (wab5086@psu.edu)…… 1

Problem Statement (hws5264@psu.edu)…….. 1

Mission Statement (Team)……... 1

Gantt Chart (wab5086@psu.edu)(hws5264@psu.edu)…….. 2

Customer Needs Assessment (nxg5145@psu.edu)..... 3

Design Concepts (abm5403@psu.edu) …… 6

Design Matrix 1 (Team)…… 7

Design Matrix 2 (Team) …….. 8

Working Drawing (hws5264@psu.edu)…… 9

Final Design and Prototype Images (hws5264@psu.edu)…… 13

Design Features (nxg5145@psu.edu)……..... 16

Operation Instructions (nxg5145@psu.edu) …… 17

Working Mechanism (nxg5145@psu.edu) …… 18

Cost Analysis (sxr59@psu.edu)(abm5403@psu.edu) …… 18

Conclusion (sxr59@psu.edu)…… 19

Acknowledgements (sxr59@psu.edu)…….. 19

References (abm5403@psu.edu)..... 20

Introduction

The *Easy-Does-It* Dumpling Maker is a convenient, efficient and reasonable machine to make the dumpling making experience smooth and friendly. In this report, one will firstly encounter a customer-based assessment where team 1 analyzed the specific components of the design. Using these results, six designs were created, *Easy-Does-It* being one of them. A weighted matrix gives more importance to some criteria that helped the team on deciding which design to go forth with.

The ultimate goal was to come up with a prototype that helps the customer envision the design. As its name suggests, *Easy-Does-It* is extremely easy to use and understand as a product. Its working mechanism, bill of materials, detailed drawings and engineering analysis have been presented to you in the latter part of this report.

Problem Statement

As the popularity for Chinese food grows in America, there is an advanced need for dumplings. Therefore there is a need for a machine to create more than 10 dumplings per minute using a full- automatic, or semi-automatic machine. This machine should produce a nominal amount of dumplings as well as use either pre-made dough, or, should make the dough in a mixer and then go through an internal process of creating a dumpling.

Mission Statement

The mission is to design a dumpling maker that:

1. Should be **automatic** or **semi-automatic.**
2. Should produce **no less than 10 dumplings per minute** on average.
3. Has material **costs not exceeding $200**.
4. Should be **safe** as a food processor.
5. Is **easy to maintain**.
6. Is **dishwasher safe**.

Gantt Chart

	7/23	7/27	7/30	8/3	8/6	8/10	8/12
Information Gathering							
Research							
Brainstorming							
Design Matrix							
Design/Working Drawings							
Building and Testing Prototype							
Prototype Evaluation							
Design Documentation							
Project Presentation							

*Blue denotes working days, Red denotes deadline

Table 1

Customer Needs Assessment

The survey can be found online by clicking **here.** The following pie-charts summarize our results.

What is more important for a dumpling maker: **quality or quantity?**

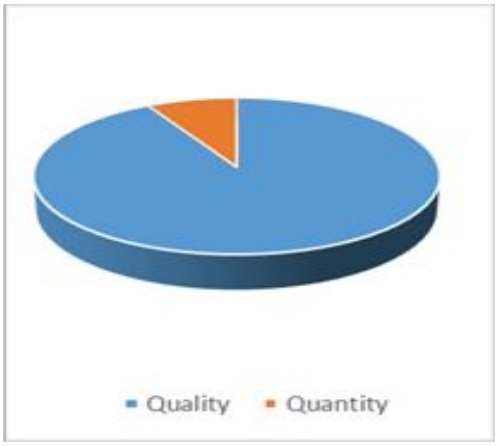

Figure 1

What would you **use** your dumpling maker for?

Figure 2

Does the **appearance** of
the dumpling matter**?**

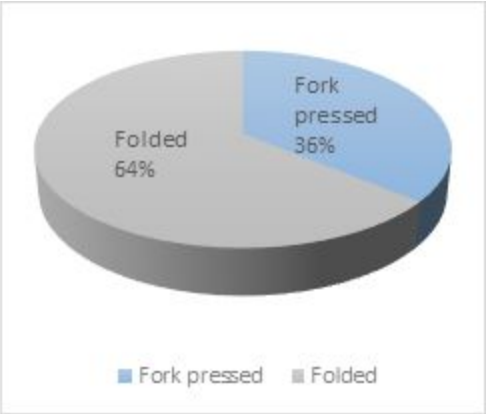

Figure 3

Do you find **kneading the**
dough tedious?

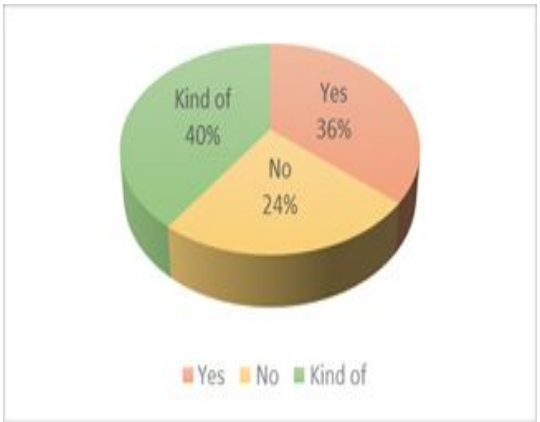

Figure 4

How would you like your
dumpling maker?

Figure 5

Design Concepts

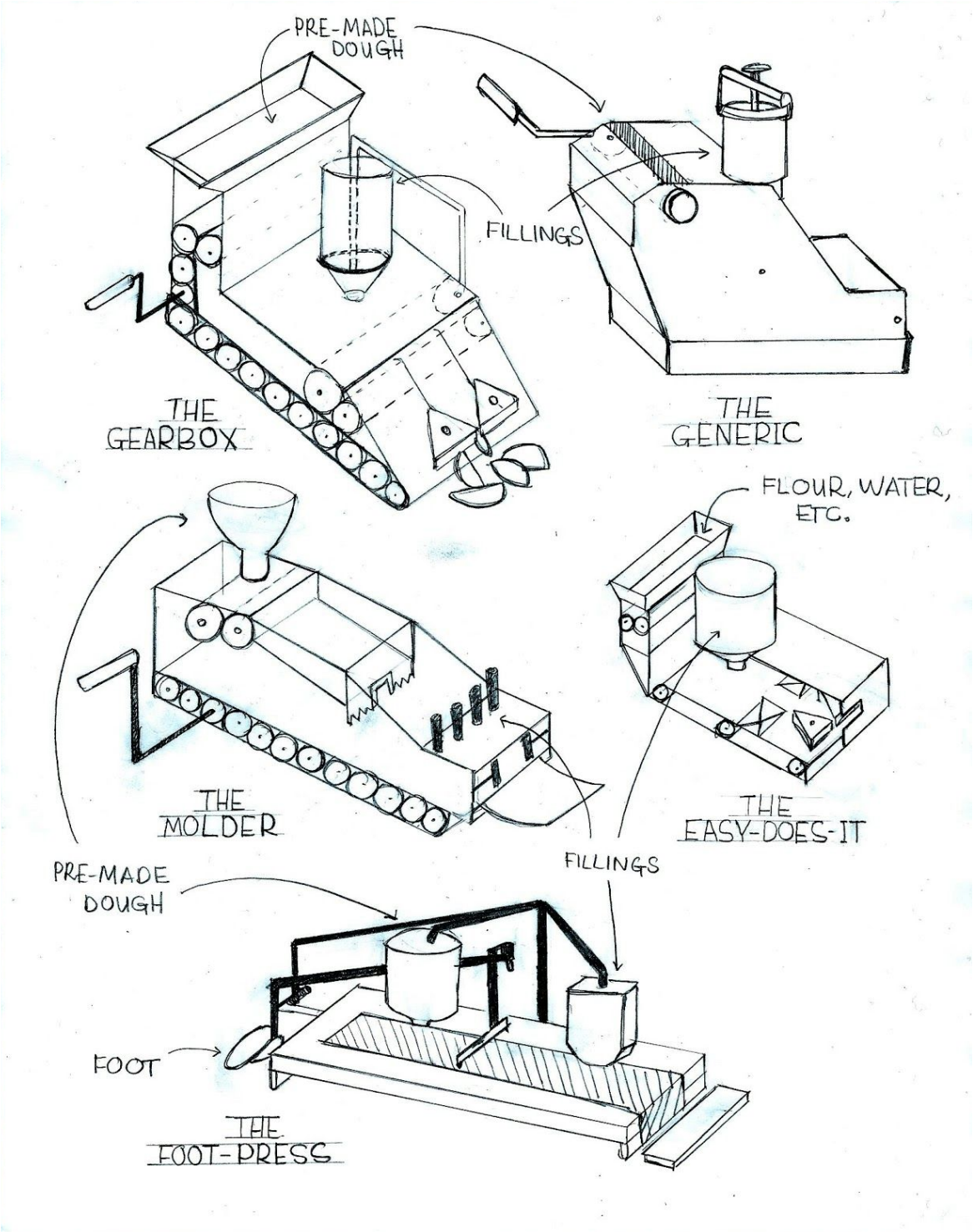

Figure 6

Design Matrix

Selection Criteria	**The Clapper**	**The *Easy-Does-It***	**The Generic (Reference)**	**The Molder**	**Foot Press**	**The Gearbox**
Automatic	+	+	0	0	0	0
10 Dumplings Produced per Minute	+	+	0	0	-	0
Easy to Maintain	0	0	0	0	0	-
Dishwasher Safe	0	0	0	0	0	0
Assembly	0	0	0	0	0	0
Cost Efficient	-	-	0	-	0	-
Compact	-	0	0	-	-	-
Sum +'s	2	2	0	0	0	0
Sum 0's	3	4	7	5	5	4
Sum -'s	2	1	0	2	2	3
Net Score	0	1	0	-2	-2	-3
Rank	2	1	2	4	4	6
Continue?	YES	YES	YES	NO	NO	NO

Table 2

Selection Criteria	Weight	The Easy-Does-It		The Generic (Reference)		The Clapper	
		Rating	Weighted score	Rating	Weighte d score	Rating	Weighted score
Automatic	20	4	0.80	3	0.60	4	0.80
10 Dumplings Produced per Minute	15	4	0.60	3	0.45	4	0.60
Easy to Maintain	15	3	0.45	3	0.45	3	0.45
Dishwasher Safe	15	3	0.45	3	0.45	3	0.15
Assembly	10	3	0.30	3	0.30	3	0.20
Cost Efficient	5	2	0.10	3	0.15	2	0.10
Compact	20	3	0.60	3	0.60	2	0.40
Total Score			**3.30**		**3.00**		**2.70**
Rank			**1**		**2**		**3**
Continue?			**DEVELOP**		**NO**		**NO**

Table 3

The Final Design and Prototype

Working Drawings

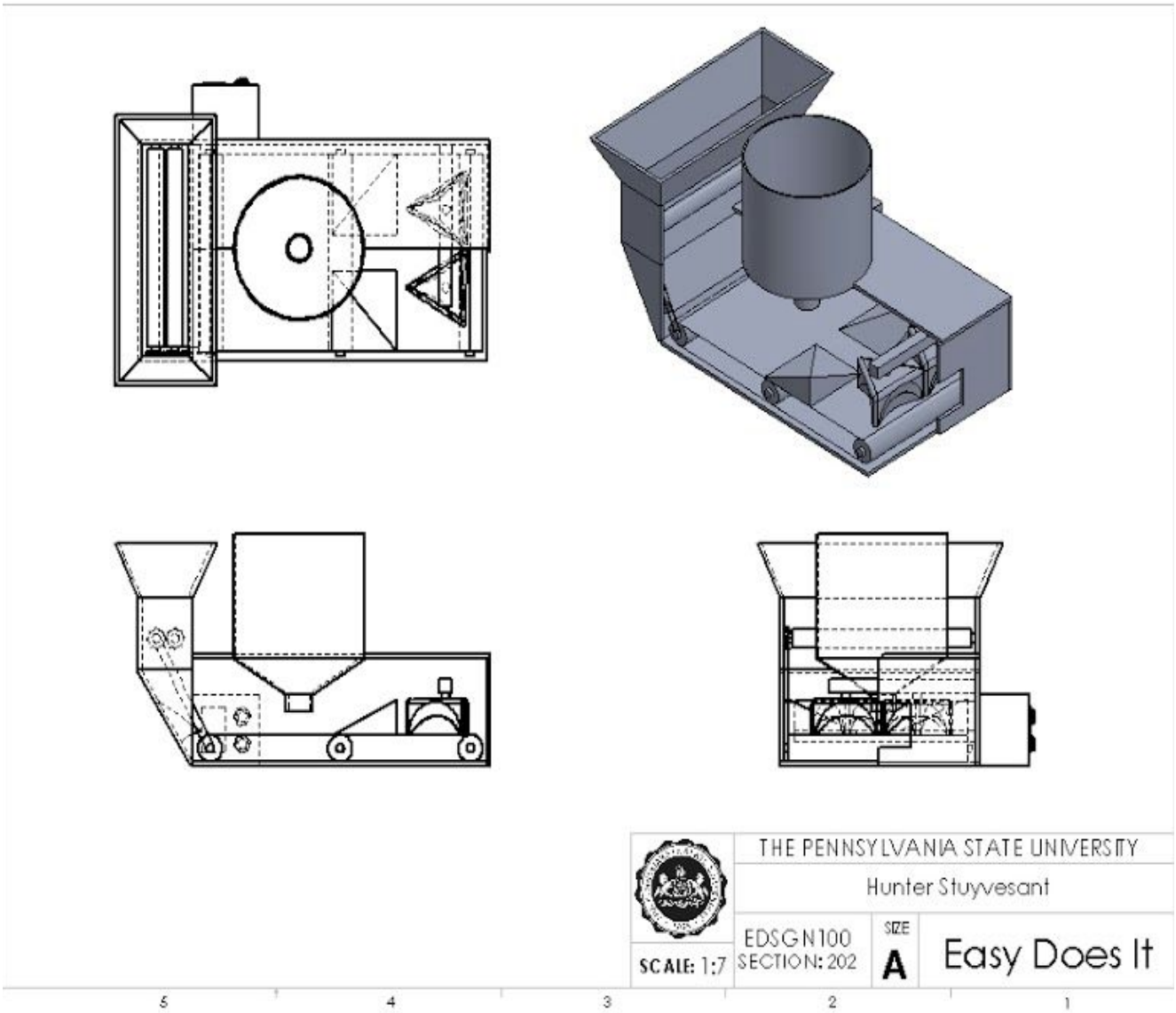

Figure 7: Assembly Drawing

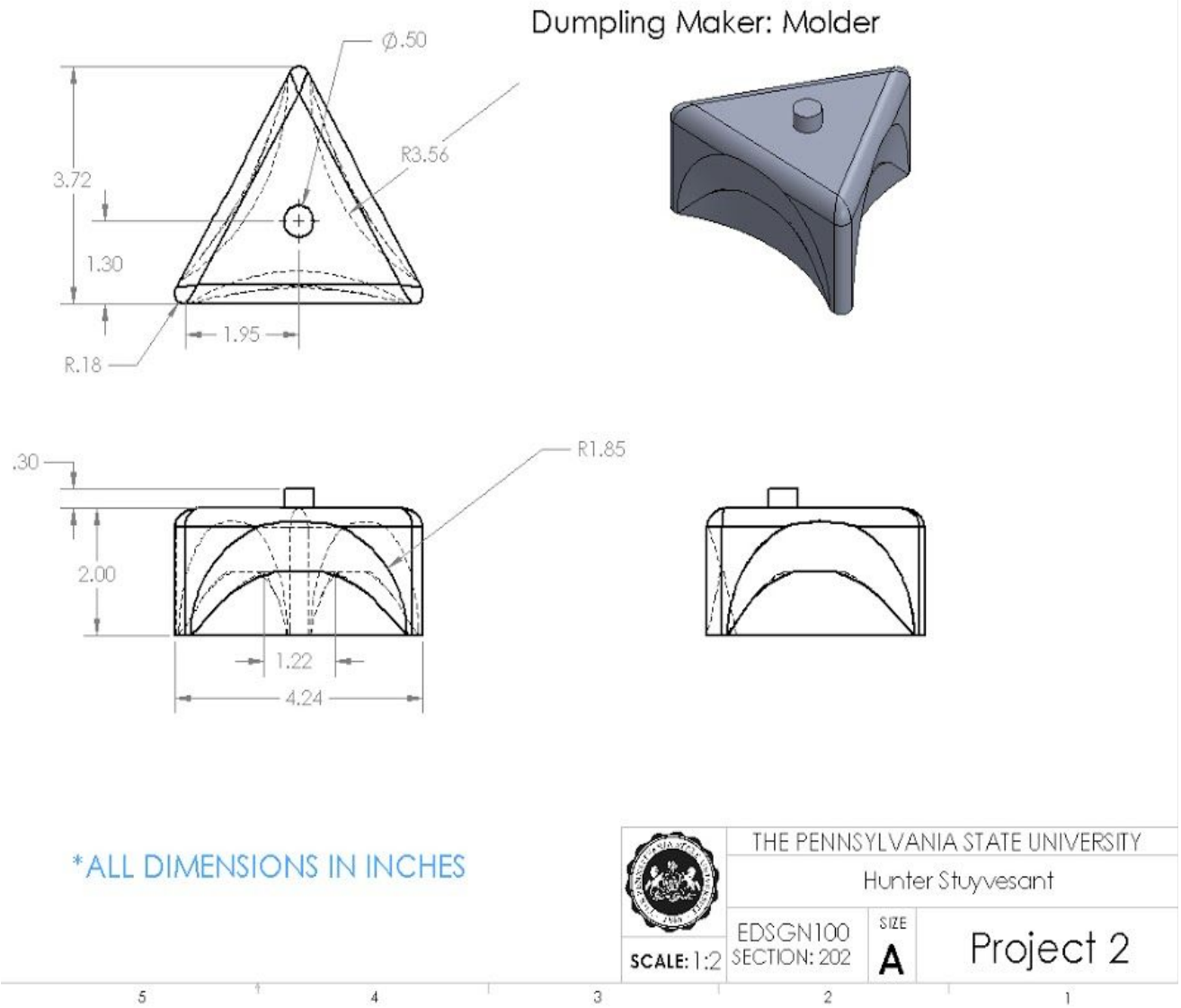

Figure 8: Detail Drawing 1

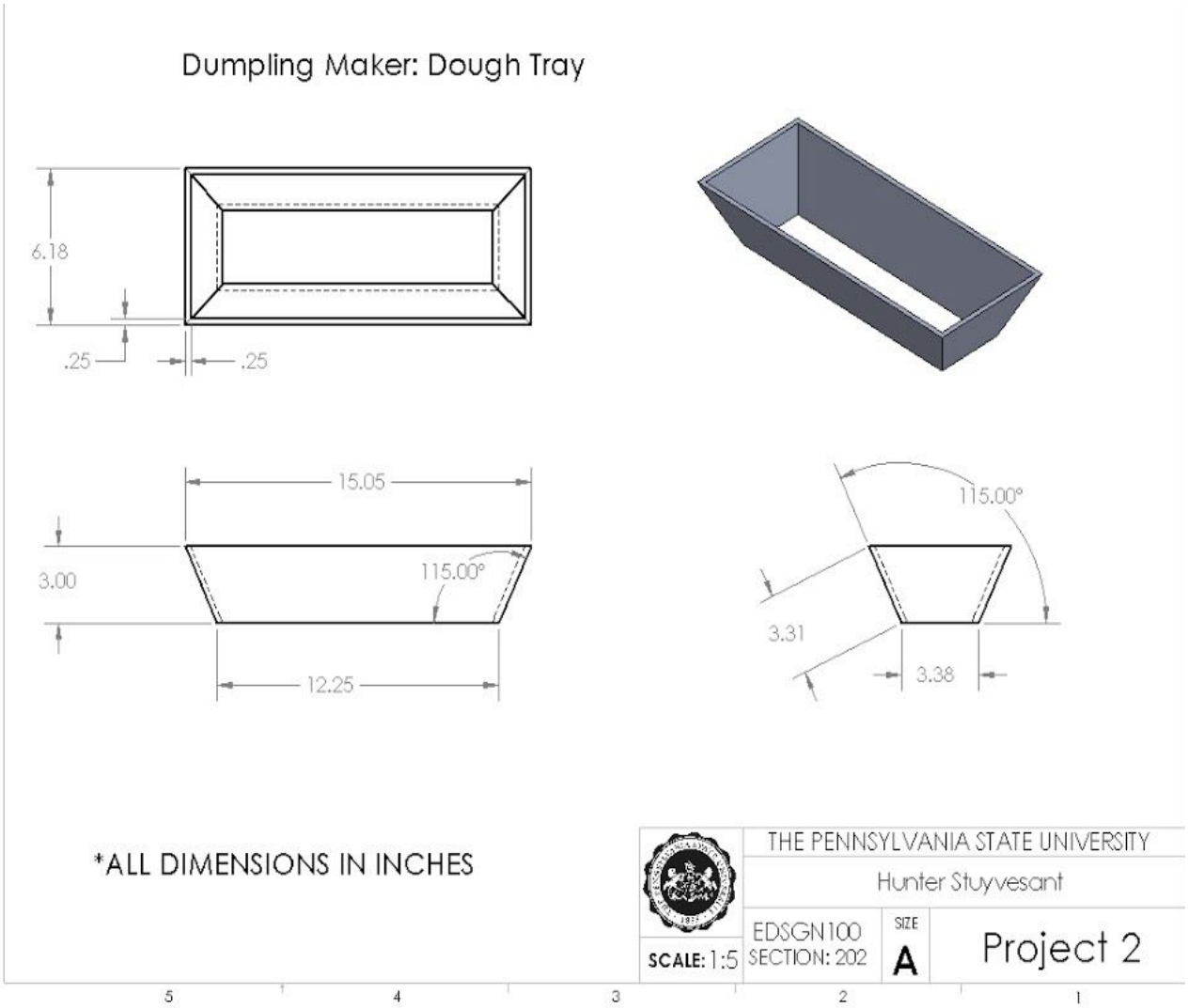

Figure 9: Detail Drawing 2

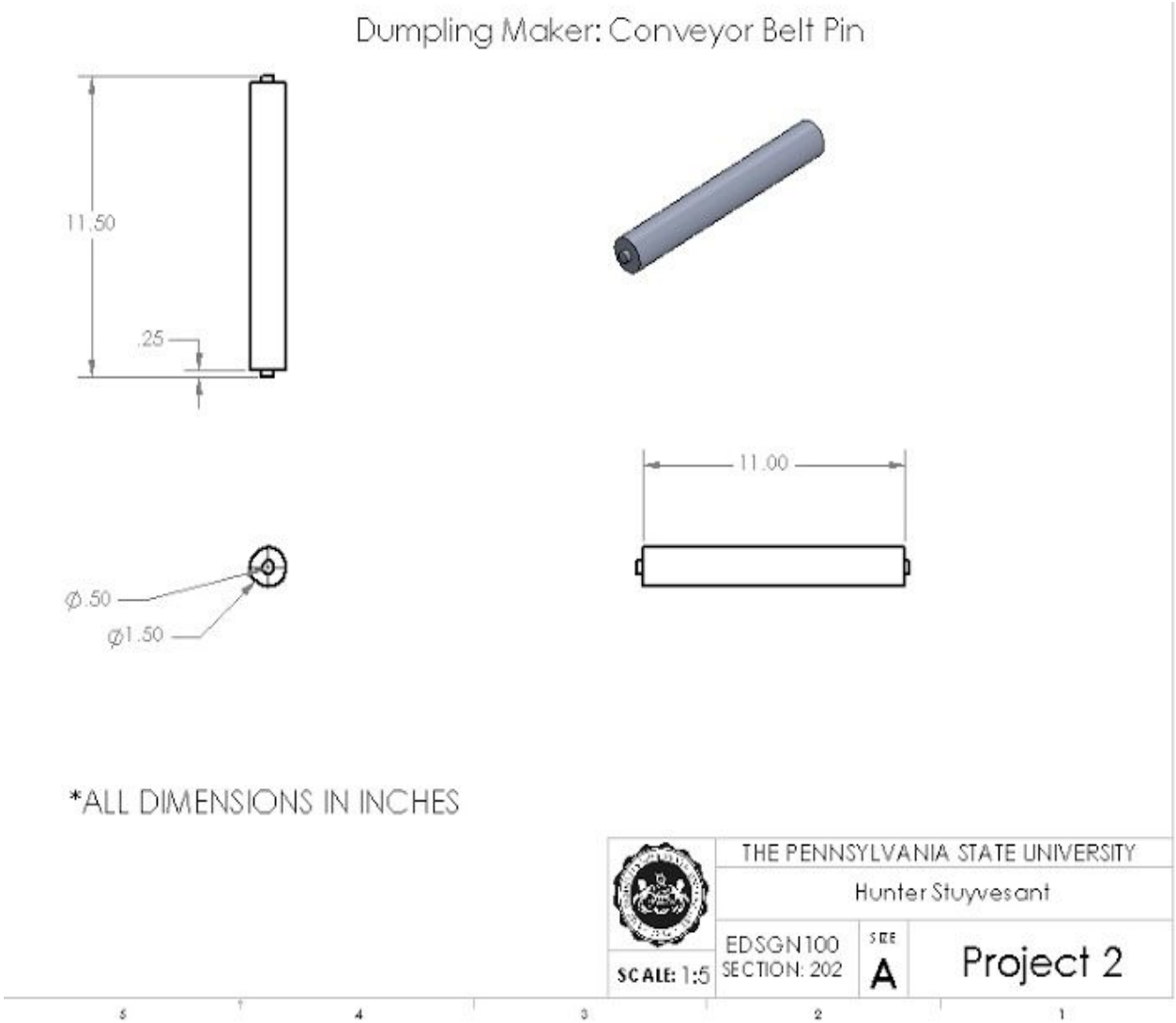

Figure 10: Detail Drawing 3

Figure 11: Prototype Front View

Figure 12: Prototype Top View

Figure 13: Prototype Isometric View

Design Features

Easy-Does-It dumpling maker has the following distinct parts:

1. **Flour Funnel**: Orifice and shaft to pour in the pre-mixed flour for the machine to knead. This can be disassembled from the rest of the machine body.
2. **“Knead Dough” Button:** Electronic circuit connected to motor that forces to rollers to knead the dough.
3. **Motor**
4. **Rollers:** Rotate anticlockwise and knead the dough that pours in directly from the flour funnel. The rollers can be removed for cleaning.
5. **Conveyors**
6. **Filling shaft funnel:** Deliver vegetables to the dumpling molds exiting the flour-funnel on the conveyor.
7. **Triangular clappers:** Attached to the rear end of the dumpling-maker, they are used for wrapping the two free ends of the flour mold.

Operation Instructions

The instructions below highlight step-by-step instructions for operating *Easy-Does-It* dumpling maker.

- **Step One.** For one serving of dumplings (10 pieces), add about **1.5 cup of all-purpose flour** followed by ⅓ to ½ **cup water**. Remember to add the flour first as the water would accumulate flour lumps. If not using for the first time, make sure the flour-funnel and the rollers are clean and dried.

- **Step Two:** After mixing the flour and water to form a relatively uniform lump of dough, insert it into the **Flour Funnel.** Plug the dumpling-maker to a 120V power supply.

- **Step Three:** Add the cooked fillings of your choice (vegetables/ chicken /pork /beef /cheese/spices/salt) into the **Filling Shaft Funnel** making sure that none of them are wet and sticky.

- **Step Two.** Push **KNEAD DOUGH** button right next to the flour-funnel. A motor rotates the roller and begins to knead the dough. In about 3-3.5 minutes, push this button to stop kneading.

- **Step Three.** Just relax and give *Easy-Does-It* a minute. As the kneaded dough departs the rollers from the flour funnel, *Easy-Does-It* is synchronized to deliver the fillings right into the dough. The clappers will cut and wrap the dough.

OUTPUT: Folded dumplings that are ready to fry or steam.

Working Mechanism

1. As soon as you add the lump of dough to the flour-funnel, the rollers move in opposite directions using a driving force from the motor. The rollers have gears which enable them to move in opposite directions.
2. As the dough is kneaded, we obtain a rather 'planar' piece of dough that is delivered to the conveyor belt driven by the motor. We use electronics to synchronize the delivery of the vegetables into the dough.
3. The planar piece of dough moves ahead on the conveyor belt and we have clappers that move at right angles. These clappers cut the piece of dough and end up wrapping the dough as they move at right angles. Their movement is also controlled by the electronic sensor.
4. Lastly we collect our dumplings from the conveyor. The waste can be removed and re-added to the flour-funnel and the same process is repeated.

Cost Analysis

No.	Item	Cost ($)
1.	Compact Size DC Right Angle Gear **Motor** 45ZY12-77WJ	38.00
2.	1.5" Diameter **Conveyor Roller** ($7.00 each) x 3	21.00
3.	.7" Diameter **Conveyor Roller** ($6.50 each) x 2	13.00
4.	Large Capacity 8" Diameter **Funnel** - Polyethylene	31.20
5.	¼" thick 36" x 36" **Chemical-Resistant PVC**	57.74
6.	0.11" thick 12"x18" **Oil-Resistant Vinyl/Nitrile Blend**—White ($10.99 each) x 2	21.98
7.	½" Nylon Flat Head Machine **Screws** ($5.18 per packet of 100) x 20	1.04
	Total	**184.29**

*All prices are an estimate

Conclusion

While brainstorming for a design, each member in the group came up with a design based on the mission statement and the customer needs assessment. The design matrix was used to choose the best design to construct our dumpling maker. The overall design of our dumpling maker consist of a semi-automatic machine that is safe, easy to maintain, relatively compacted and capable of producing up to 10 dumpling a minute. To ensure minimum risk, the overall machine is encased in a solid plastic enclosure, which makes it very useful in any home kitchen. the Easy Does It mostly operates on a motor and a conveyor belt. It has the ability to flattened the dough, put the feelings on the dough, and change the shape into a 90 degree angle. It also has a feature to mold and cut the dough. The participation of each group member lead to the successful design of the Easy Does It dumpling maker.

Acknowledgement

Team 1 would like to acknowledge the wise leadership of Professor Xinli Wu and both of the TA's Nick and Jacob for their help in our second design project. Their guidance has helped the team complete and learn along the way. We would also like to acknowledge Penn State Center for Engineering Design and Entrepreneurship, for proving Workspace and Materials.

References

Large-Capacity Funnel—Polyethylene. (2015, August 10). Retrieved from: http://www.mcmaster.com/#funnels/=yfnmgn

2" Diameter Conveyor Roller. (2015, August 10). Retrieved from: http://www.mcmaster.com/#2276t71/=yc2jp8

Chemical-Resistant PVC. (2015, August 10). Retrieved from:

http://www.mcmaster.com/#standard-plastic-sheets/=yfdan4

Compact Size DC Right Angle Gear Motor 45ZY12-77WJ. (2015, August 10). Retrieved from: http://www.alibaba.com/product-detail/Compact-Size-DC-Right-Angle-Gear_667847053/showimage.html