EDSGN 100

Introduction to Engineering Design

Section 202: Group 1

Submitted by:

1. Stanley Rhau
2. Bill Brant
3. Aizat Afiq Mohammad
4. Hunter Stuyvesant

Submitted to: Xinli Wu

Summer 2015

Abstract

The purpose of this design project was to create a shopping cart that is both easily portable/storable as well as able to carry a distributed load of 100 pounds. Five distinct, lightweight carts were created, the most cost-effective was chosen out of those five to be prototyped.

Table of Contents

Cover Page (abm5403@psu.edu)..... i

Abstract (wab5086@psu.edu)..... ii

Table of Contents (wab5086@psu.edu)..... iii

Introduction (hws5264@psu.edu)..... 1

Problem Statement (Team)..... 1

Mission Statement (Team)..... 1

Gantt Chart (Team)..... 2

Customer Needs Assessment (Team)..... 3

Design Concept (abm5403@psu.edu)..... 4

Design Matrix 1 (Team)..... 5

Design Matrix 2 (Team)..... 6

Final Design and Prototype Images (hws5264@psu.edu)..... 7

Operation Instructions (hws5264@psu.edu)..... 12

Working Mechanism (abm5403@psu.edu)..... 12

Cost Analysis (Team)..... 12

Conclusion (sxr59@psu.edu)..... 13

Acknowledgements (hws5464@psu.edu)..... 13

Introduction

This design project was to develop a shopping cart that was designed for a customer to carry bags from the grocery store to an apartment a short distance away. Some specifications for the project included, a $50.00 project limit, a 100 pound carrying capacity, safety, easy use, easy storage, and lastly easy assembly. The team decided to approach the project with a few simplistic ideas that considered basic mechanisms to create folding and collapsing carts which are shown below in figure two of the project. After collecting responses from customers and carefully weighing options on all design spec's through a matrix, the design was selected. It was not only a cost efficient and safe design, but it's simplicity and easy working mechanism as well as its seemingly appropriate capacity. The cart appeared to fit the design specifications well and its uniqueness was evident as it was the only cart to be two wheeled in the class. The largest challenge to overcome was the cart's issues with stability. After review it was shown to be lacking support in the lower base if it was to carry a larger load like a case of water or soda. Overall the project turned out to be an interesting test to start off the class and was an enjoyable experience to build and conceptualize.

Problem Statement

In today's culture, more apartments and high-rise buildings are being constructed. The problem was customers may not have a vehicle to transport groceries to their house or apartment. More specifically, customers who live on multistorey apartments have a problem to carry the items they bought up to their own house. So there is a need for a way to transport the items from the store to their homes without over exerting one's own strength.

Mission Statement

The mission is to design a shopping cart that:

1. Supports a **100 lb of distributed load**.
2. Costs **no more than $50**.
3. Is **easy and safe to use**.
4. Is **ideal for transporting groceries** and some other materials.
5. Able to be **easily maneuvered up stairs**.
6. Can be **compactly folded for easy storage**.

Gantt Chart

	7/2/15	7/6/15	7/9/15	7/13/15	7/16/15	7/20/15	7/23/15
Information Gathering							
Research							
Brainstorming							
Design Matrix							
Design/Working Drawings							
Building and Testing Prototype							
Prototype Evaluation							
Design Documentation							

*Blue denotes working days, Red denotes deadline

Table 1

Customer Needs Assessment

A 5-question survey done on potential customers (mostly students). Total participant was 8.

1. What do you expect most out of the shopping cart?
2. Which one do you prefer; higher mobility or higher capacity?
3. Does the cart need to be able to travel up stairs?
4. Does its appearance matter to you?
5. What kind of terrain will you be travelling on?

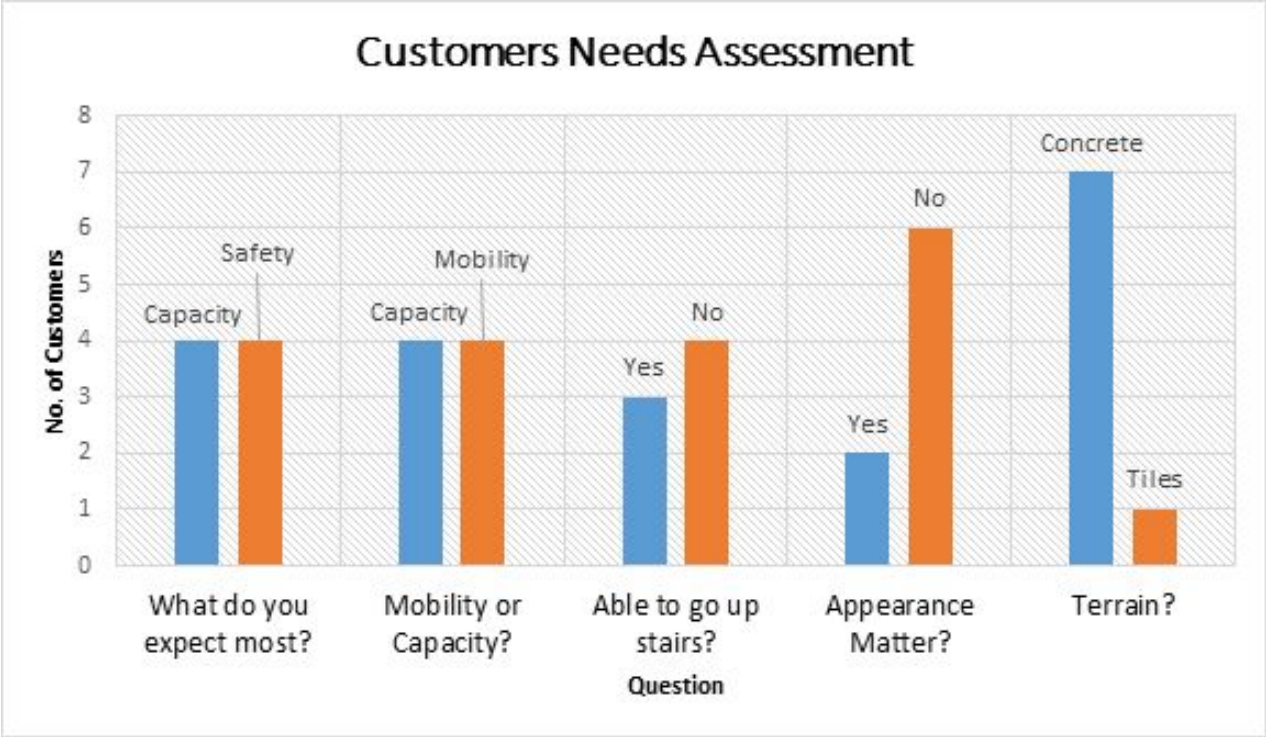

Figure 1

Design Concepts

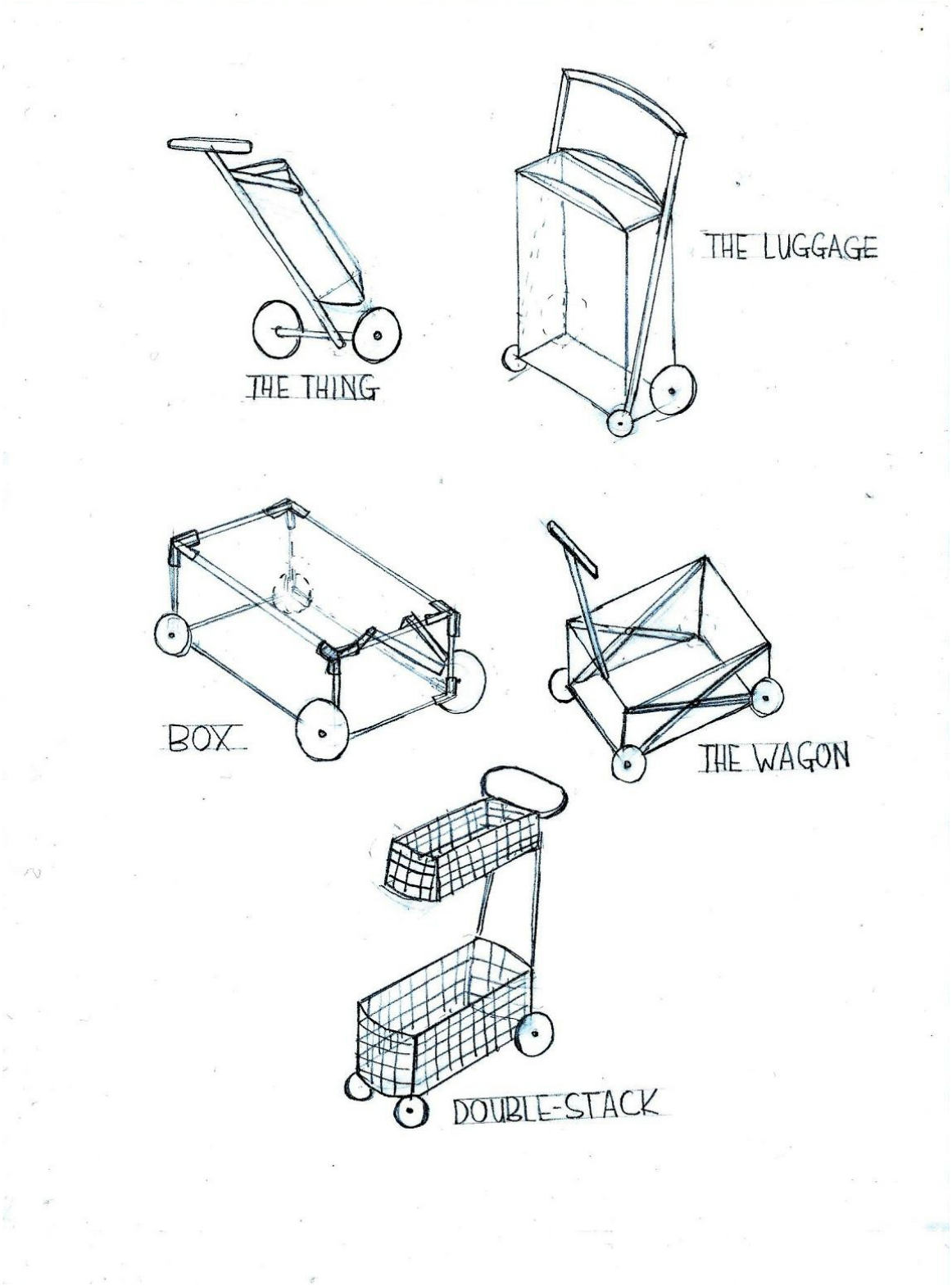

Figure 2

Design Matrix

Selection Criteria	The Thing	Box	The Luggage (Reference)	The Wagon	Double-stack
Storage	0	-	0	0	-
Capacity	0	+	0	+	+
Handling	0	0	0	0	+
Mobility	+	-	0	-	-
Cost-efficient	+	-	0	-	-
Safety	0	0	0	+	0
Assembly	+	-	0	+	0
Sum +'s	3	1	0	3	2
Sum 0's	4	2	0	2	2
Sum -'s	0	4	0	2	3
Net Score	3	-3	0	1	-1
Rank	1	5	3	2	4
Continue?	Yes	No	Yes	Yes	No

Table 2

Selection Criteria	Weight	The Thing		The Luggage (Reference)		The Wagon	
		Rating	Weighted score	Rating	Weighted score	Rating	Weighted score
Storage	15	3	0.45	3	0.45	3	0.45
Capacity	20	3	0.60	3	0.60	4	0.80
Handling	15	3	0.45	3	0.45	3	0.45
Mobility	20	4	0.80	3	0.60	1	0.20
Cost-efficient	10	4	0.40	3	0.30	2	0.20
Safety	15	3	0.45	3	0.45	4	0.60
Assembly	5	4	0.20	3	0.15	4	0.20
Total Score			3.35		3.00		2.90
Rank			1		2		3
Continue?			Develop		No		No

Table 3

The Final Design and Prototype Images

Working Drawings

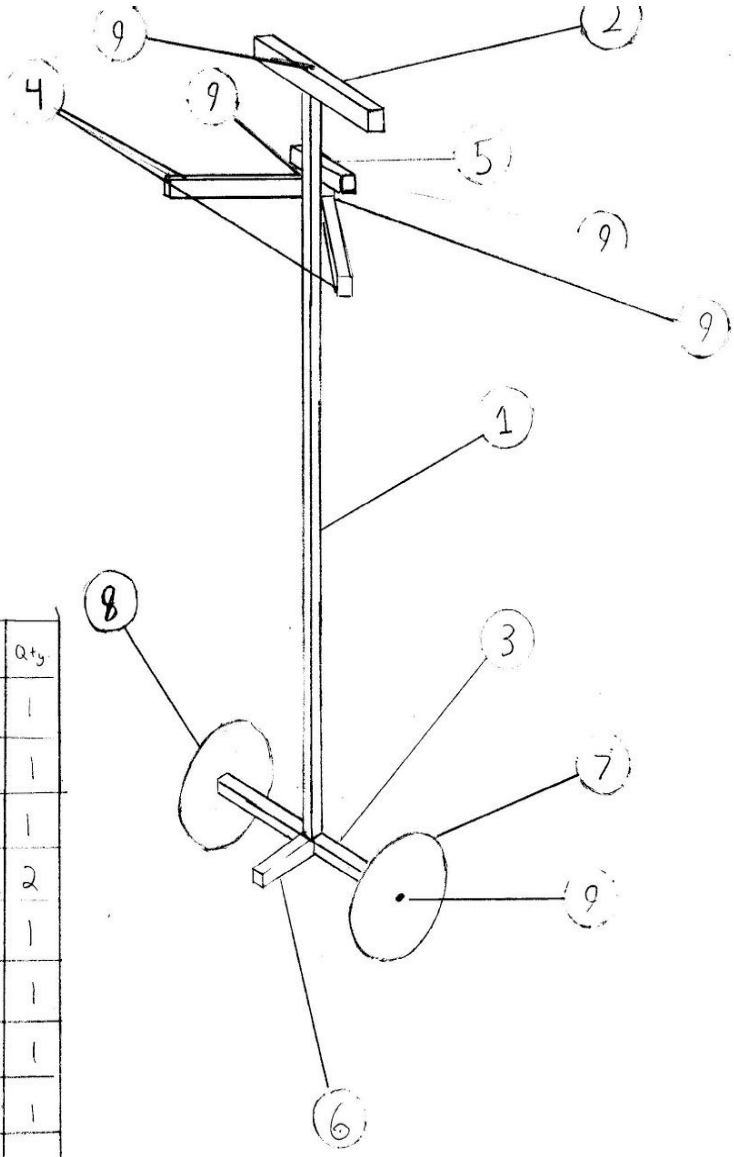

NUM	Description	Dimension	Qty
1	PVC center shaft	3' 6" x 3/4"	1
2	PVC Handle	1' x 3/4"	1
3	PVC Axle base	1' 6" x 3/4"	1
4	PVC folding Arms	1' (each)	2
5	PVC back arm brace	6" x 3/4"	1
6	PVC stop	6" x 3/4"	1
7	Rubber wheel	5" diam x 3/4"	1
8	Rubber wheel	5" diameter x 3/4"	1
9	Zinc plated, pointed Plastic thread Screws	5/8" length	10
10	Tyvek Bag (NOT SHOWN)	3' length (fits over arms)	1

Figure 3

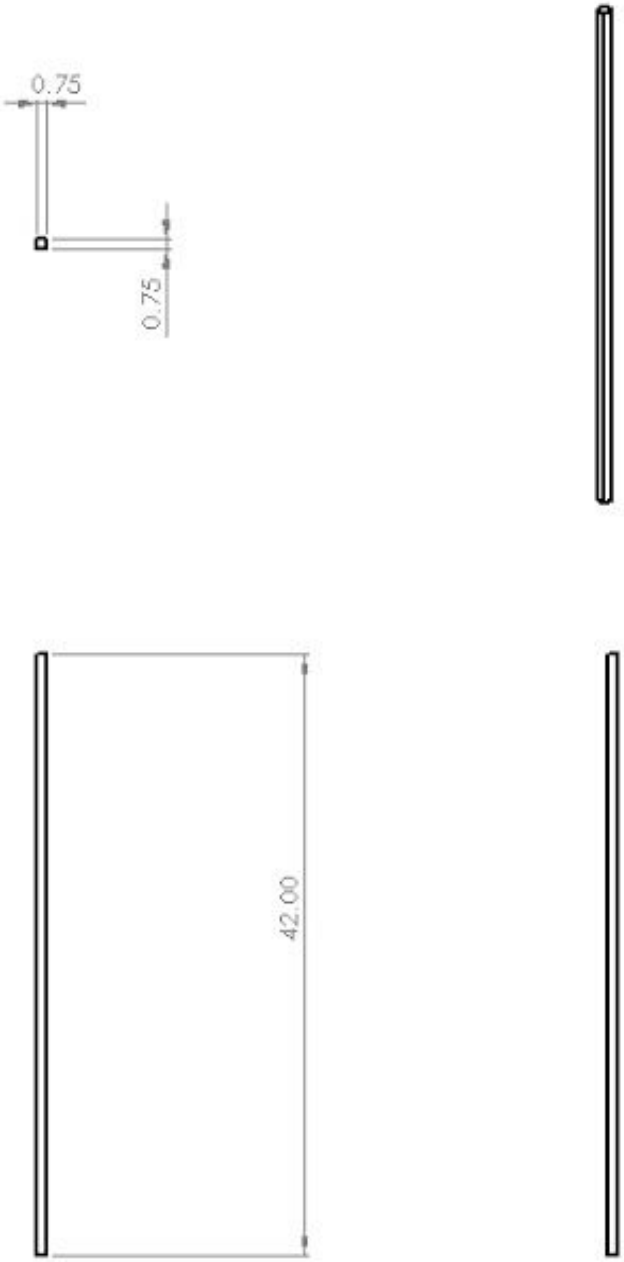

Figure 4: Cart Shaft
***Measurements in inches**

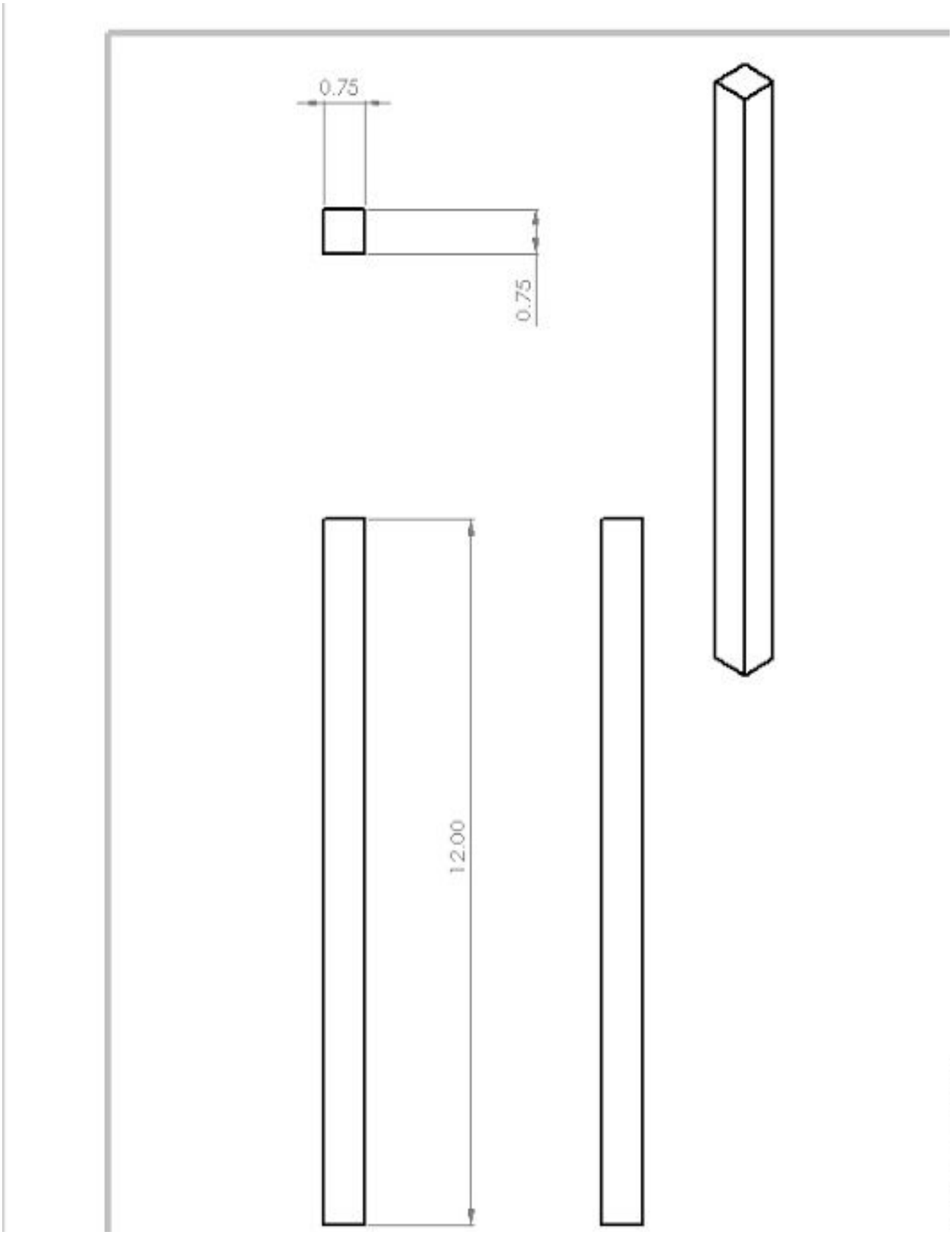

Figure 5: Cart Handle

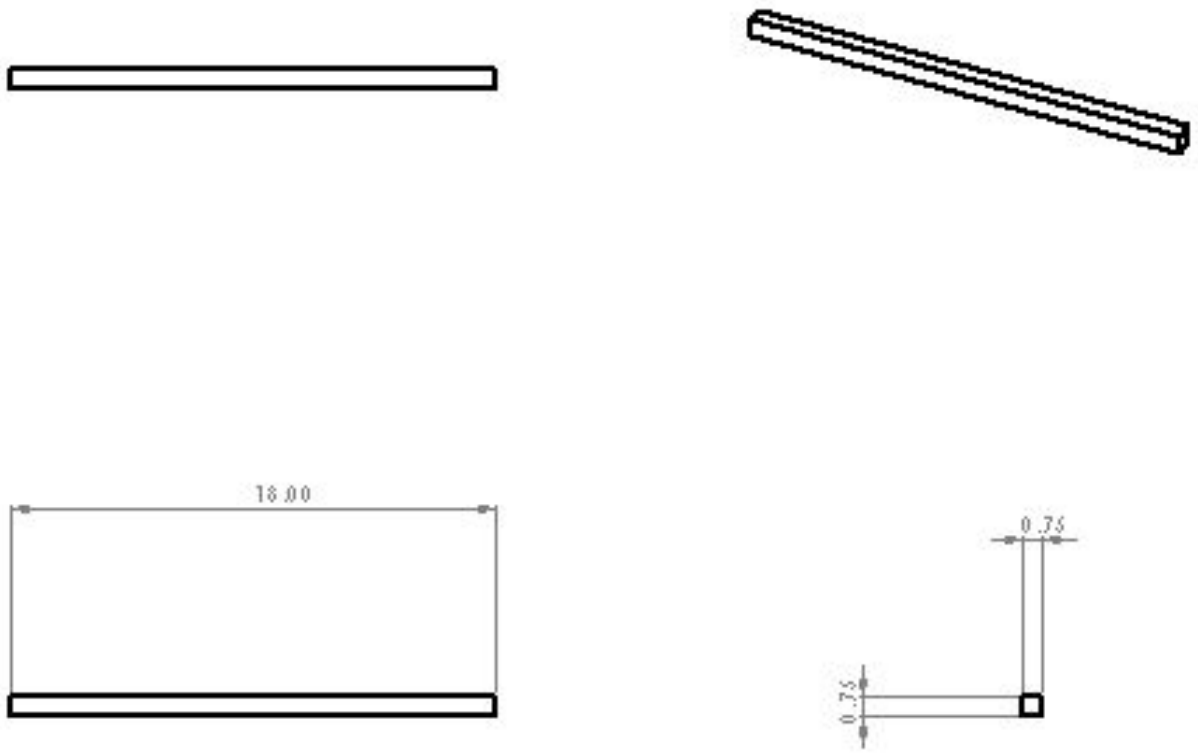

Figure 6: Cart Base

Scale: 5” = 1’ - 0”

Figure 7: Prototype Side View

Figure 8: Prototype Top View

Operation Instructions

To operate and assemble the cart, simply fold the arms down till they are supported by the back brace, then slide the designated sides of the tyvek bag over the arms to create a central storage bag. After, simply tilt the cart back and either push or pull to move the cart. To store the car, follow processes the same process in a reverse order.

Working Mechanism

The shopping cart is a two-part item. The first part consists of the PVC-based body and the wheels which are made of rubber. The second part is the fabric made of Tyvek. The wheels are intentionally designed to be bigger than usual to allow better handling and mobility. They are located perpendicular to the vertical body, while having a stopper at the center and perpendicular to the axis of the wheels. This stopper makes it possible for the shopping cart to stand upright while having just two wheels. The handle which is placed on top works as simple as it is and gives the freedom to the user to push or pull shopping cart according to their preferences. The arms, placed at a 45 degree angle are easily folded into an upright position when not in use. On a larger model the arms would be held by another smaller piece of PVC piping that would be screwed in to the main shaft of the cart. After folding the arms outward the large Tyvek fabric bag could then be carefully pulled over the outstretched arms creating the main component for carrying heavy groceries.

Cost Analysis

No.	Item	Cost ($)
1.	Zinc Plated Steel bolts with one hex nuts, Package of 10 (hooks)	3.93
2.	Lightweight Tyvek Fabric 1 x 60”	2.73
3.	Lightweight Tyvek Fabric 3 x 24” -($1.20 per)	3.60
4.	Strengthened Chemical Resistant PVC (9 ft) ¾” x ($3.12 per)	28.08
5.	Rubber Wheels impact resistant rubber with nylon sleeve bearings 5” diameter x 2 ($4.13 per)	8.26
6.	Pointed Screws for Plastics ⅝” length, package of 100 x 10 ($0.08 per)	0.80
	Total	47.40

Table 4

Conclusion

In conclusion, based on our mission statement and customer needs assessment, our team successfully designed a shopping cart that can easily transport items from the store. We brainstorm five designs of shopping carts and then we use the design matrix to make our final decision to which design was the best. Then we built a prototype with a scale of 5in to 1ft to demonstrate the working mechanism of the shopping cart. After careful reconsideration of the comments on the design, a realization was considered in our design and would be altered for future implementation in the project. Facing the overall challenges and time constraints the team pulled together to create an ingenuitive design and was pleased with the end result.

Acknowledgements

Team 1 would like to acknowledge the wise leadership of Professor Xinli Wu and both of the TA's Nick and Jacob for their help in our first design project. Their guidance has helped the team complete and learn along the way.