Zero Energy Home Executive Summery

By: Engineers Unlimited

Michael Trowbridge, Ruth Robles, Tyler Bonitsky, & Ahmad Hayyan

10/22/13

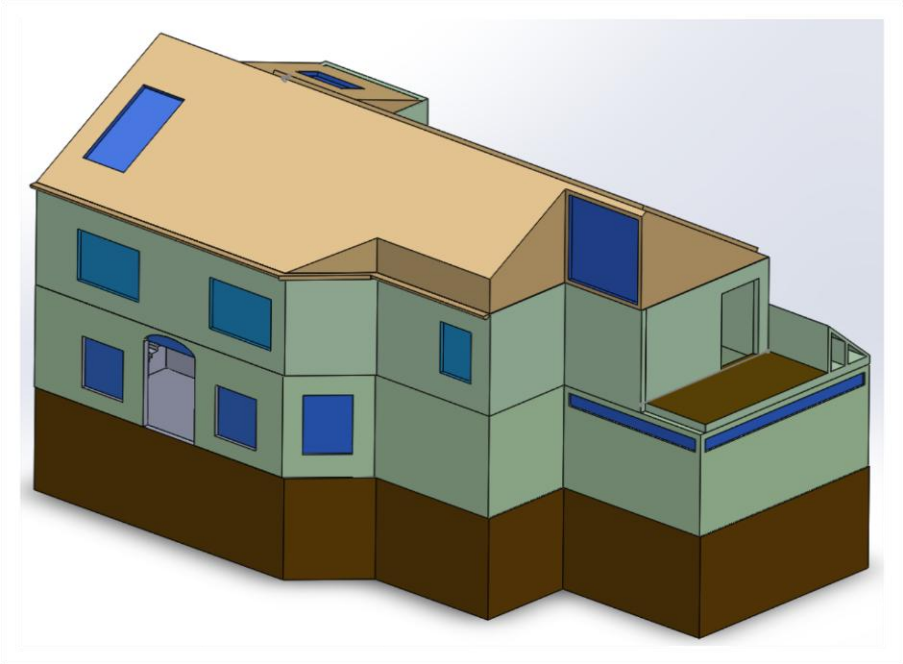

Introduction:

For this project, our team had to design a zero energy home. To go about doing this, we followed the engineering design process. This process allowed us to communicate clearly, express a diversity of ideas, allowed us to specialize tasks, and helped avoid unnecessary costs of time and other resources. Since this is a brief executive summary, we will only include a concise analysis of this process and how it related to our most pertinent design features

Figure 1: The Engineering Design Process

Summery Table:

Location (city, state)	Harrisburg, PA
House size (floor area in square feet)	1,174ft^2
Number of floors	3
Number of occupants	4
Number of bedrooms	3
Type of heating system (resistance, heat pump, etc.)	Geothermal heat pump
Size of photovoltaic system (kilowatts)	*6,800+ KWh
Solar water heater (yes or no)	yes

R-value of wall insulation	R-6
R-value of ceiling insulation	R-50
Type of windows	Triple-pane, argon filled
Ventilation air heat recovery (yes or no)	no
Total Cost ($)	$155,000

*Conservative Calculated Value

Mission Statement:

We wanted to create a mission statement that covered all our basic goals whilst being broad and encompassing enough that it did not limit the scope of our design process. Ulotimately, we decided upon the following statement:

"To design an affordable and desirable home that employs energy conservation and energy capturing techniques in order to produce an annual net zero energy cost."

Customer Needs & Target Specifications:

To determine how best to approach our concept generation, we identified customer statements and translated them into need statements. We then assigned a ranking system to these need statements.

Customer Statement	Needs Statement	Ranking
"I hate dark rooms"	The Rooms have plenty of lighting whilst avoiding unnecessary electrical costs	5
"I like having a kitchen close to the Dining Room"	The Kitchen is in close proximity to the dining room	3
"I hate when a house feels 'stale'"	There will be many windows with an optimized centralized airflow on the ground floor	4
"I hate sharing a bathroom in the morning	The Master Bedroom will have a separate full bath.	3

Figure 2: A small portion of our Customer Needs Matrix

After analyzing our customer needs statements, we realized that we could organize our target specifications into three general categories:

1) ***Maximize our natural assets (Energy production)***

2) ***Minimize the house's electrical costs***

3) Make the house comfortable and "livable

We then assigned specific target specifications to each of these categories. With our goals in sight, our team began the concept generation & selection process.

Concept Generation & Selection

After searching both internally and externally, our group came up with a plethora of concepts for our design, some of which are shown in figure 3. We then choose our final concepts through rigorous concept screening. During this phase we developed the key components that would come to define design. Everything from energy efficient appliances to skylights to high efficiency solar panels came from this process.

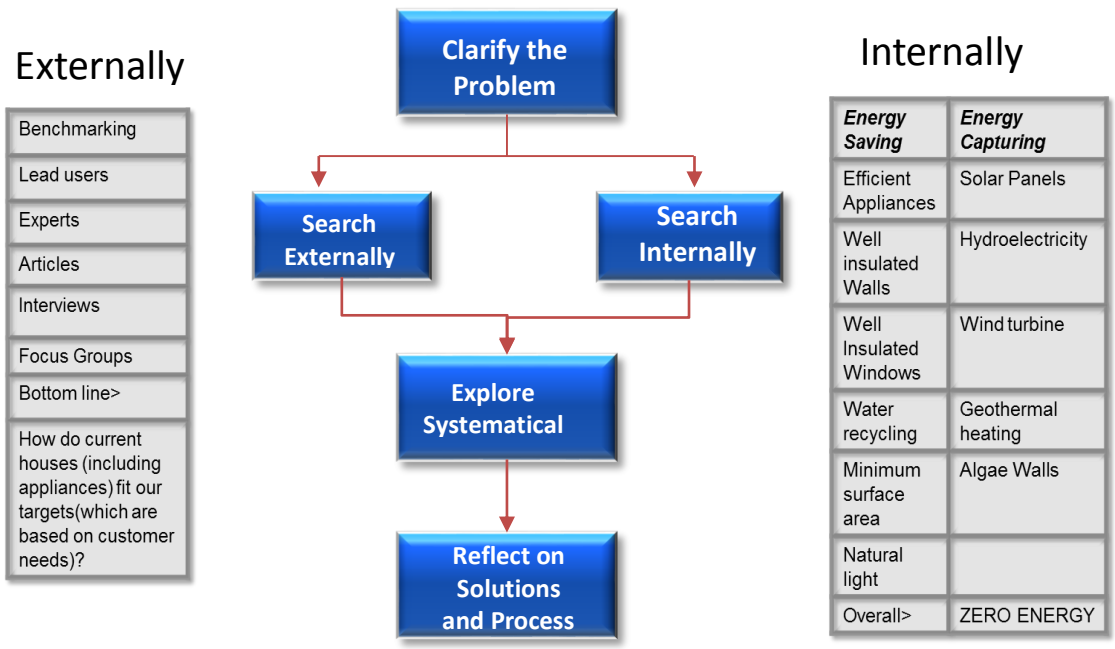

Figure 3: The general concept generation process as well as some of the broad ideas we generated via searching internally and externally.

Energy Calculations & Analysis:

Of course, one of the greatest goals in designing our house was to be sure that it would ultimately be a net zero energy home. To do this, we had to calculate the difference between the net energy yield and the net energy costs. In particular, we used the HOMER

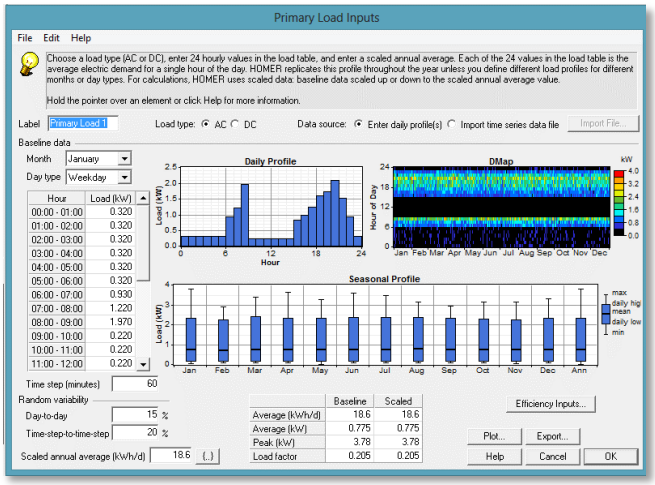

software to help use with these calculations. First, we set up a system that modeled our home. When then used our energy cost data to predict what our hourly, daily, and annual energy consumption was. This gave us our baseline annual consumption.

Figure 4: Our Primary Load Calculations. Note that our energy consumption peaks during cooking times and remains consistently low during the night and work hours.

Next, we determined the energy production of our solar panels that carried the primary load. Note that this was not quite our full number of solar panels since we also had independent solar panels dedicated to specific appliance; we removed these systems from our equation entirely since they are already fully sustainable. We also connected our main solar panel system to the grid so that we could sell excess energy during the day and summer months and buy back energy during the night and winter months such that our net energy production is at least 0.

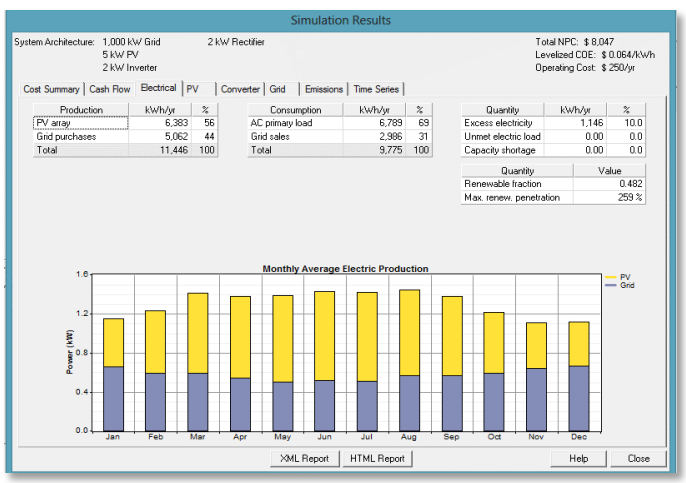

Figure 5: The HOMER Simulation Results

Using the HOMER software, we were then able to simulate our net annual energy cost or production. We also confirmed this result through an excel spreadsheet:

Item:	Annuel (KWh)	Model
Refrigrator	180	Whirlpool WRT579SMY*0*
Dish Washer	190	Bosch SHX98M0*UC
Convection Oven/microwave	2536.75	*Miele H 4024 BM Micro/Convection oven*
LED lighting	68.985	Bosch Nexxt Washer
Clothes Washer	178	N/A
Dryer	500	N/A
Tv	104.5	Sharp Aquos
4 Laptops (2 hrs) daily	50	Soney VAIO
Phone chargers	6.5	N/A
Solar water heating	0	RS80-40BP
Cable Box	24	N/A
Other Appliances (Averg	100	N/A
Cooling and heating	2850.265	

Figure 6: Our Excel Spreadsheet.

In both cases, our solar panels met our energy costs. In fact, we used an UV efficacy level significantly lower than the optimal level of our solar panels to compensate for less than ideal conditions. Still, our estimate was so conservative that it is safe to say that, in reality, our system would actually be producing energy on average.

Model Design:

After generating and selecting concepts, our team was able to start to use our selected concepts and implement them into the home model design. This process is really where our team focused on trying to seamlessly implement our zero-energy concepts into a home that was very appealing and overall "livable." After generating and selecting a rough floor plan, our team developed the final digital model using SolidWorks software, shown below in figure 7.

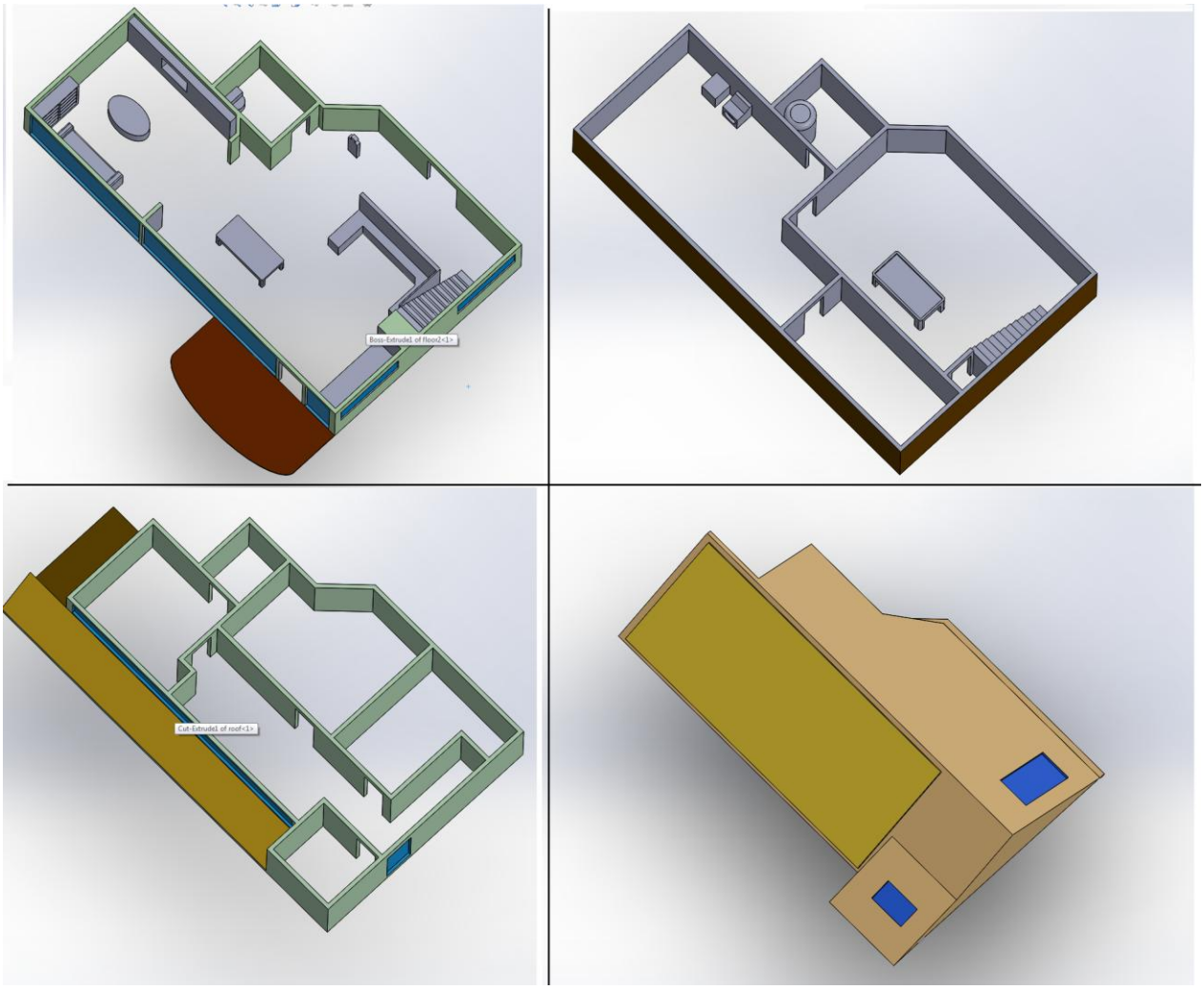

Figure 7: Detailed views of all four levels of our house via our SolidWorks Model

Note that we implemented our major features into these floor plans. For example, the ground floor has windows positioned for centralized airflow while an abundance of south facing windows allows for natural lighting. WE also took care of considering the overall “flow” of the house, such as having a kitchen that neighbors the dining room and an upstairs bathroom close to the children’s bedrooms. This is shown more clearly in figures 8-11.

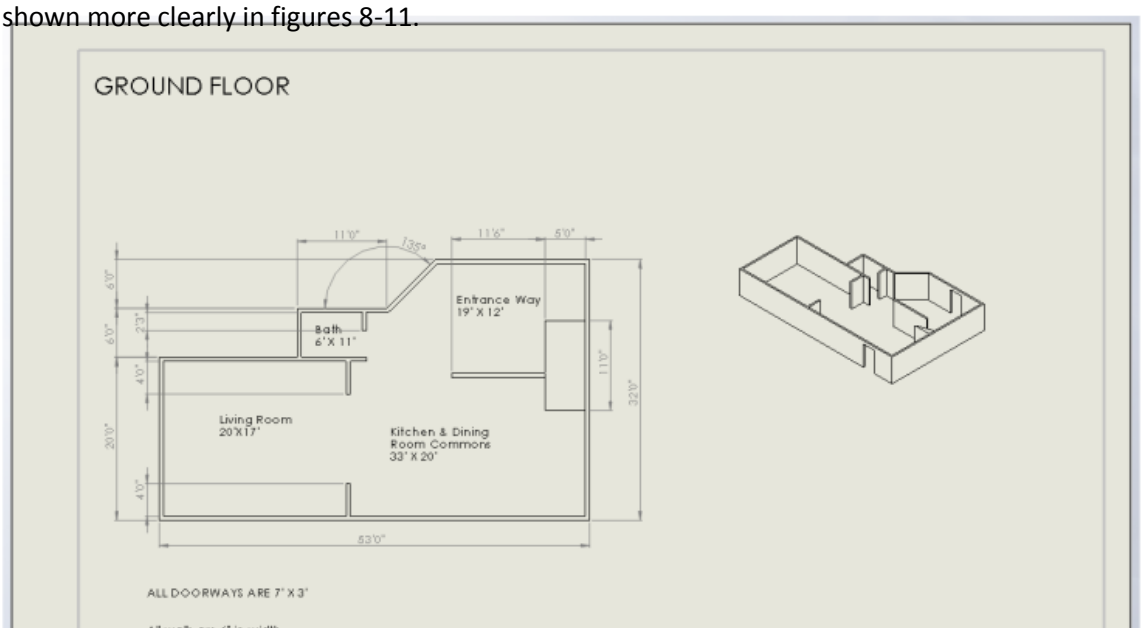

Figures 8 & 9: The ground floor and basement floor plans

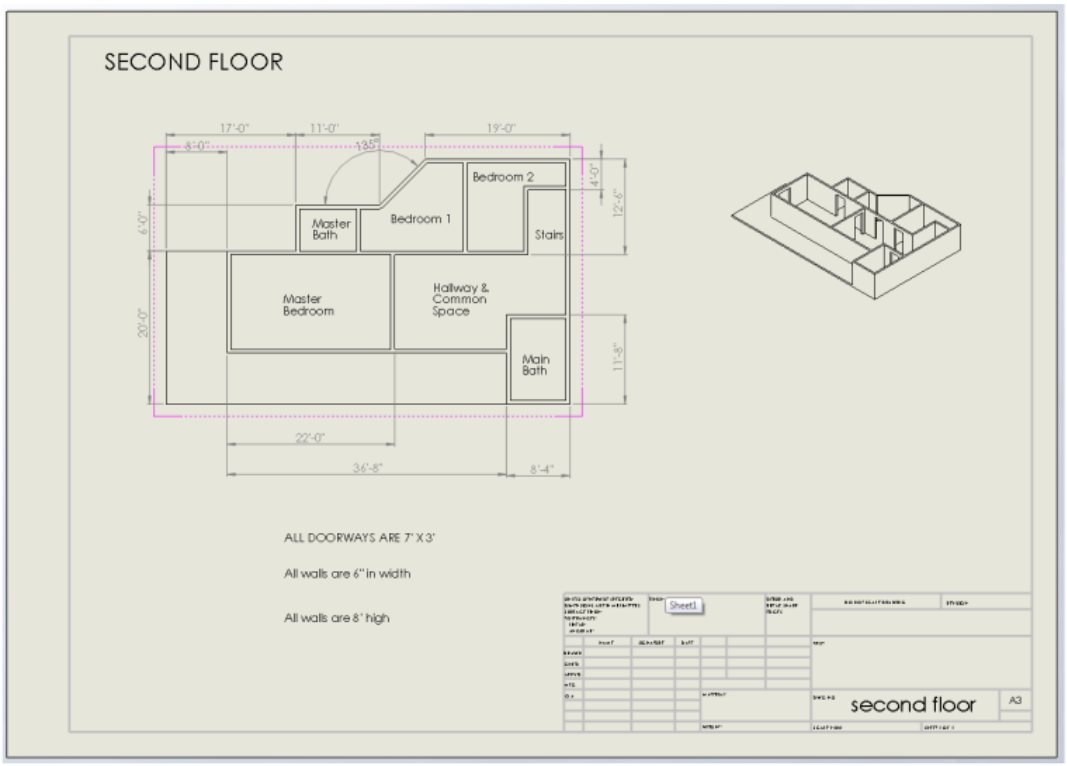

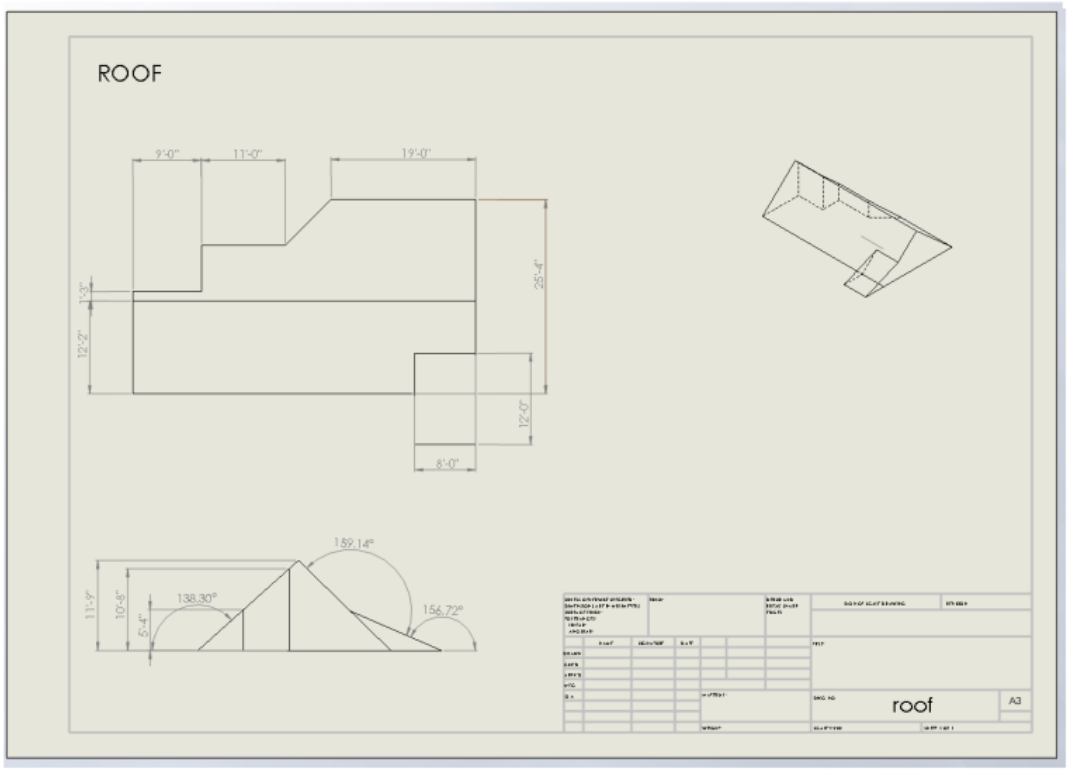

Figures 10 & 11: The second floor plan and roof design. Note that the roof is at an angle of 42°, which is the optimal angle for the solar panels on the southward side of the roof.

Model Construction:

Finally, it was time to take our design to the workshop. Since we already had accurate dimensions established, we simply used a 1:40 scale to build a model that accurately reflected the proportions of our design. Overall, our earlier planning made the construction process go relatively smoothly.

Figure 12: The Construction of the ground floor and second floor

Figure 13: The Final Model. One can see in the second photo that we included a basement floor plan below the ground floor.

Conclusion:

Clearly this project was very encompassing and had to be approached through a detailed process. From research and concept selection to the SolidWorks model and physical construction, our team had to continuous employ the engineering design process to ensure that project went as smoothly as possible. Thus, we got a firm grasp of the engineering process through this project. We also learned a lot about Zero Energy Homes and sustainable living. In particular, the concept generation and selection stages helped us understand new and cutting edge practices. One result of such research was implementing large scale natural lighting for a passive solar design.

When designing our home, we emphasized the need to find the best specific devices to meet our goals. Often, this led to concept screening and scoring, especially when deciding our energy-supplying appliances (i.e. solar panels). For example, for the geothermal furnace pump we chose the WaterFurnace 7 Series™ 700A11 since it is the only unit to surpass both the 41.0 EER and 5.3 COP efficiency barriers. After researching about different pumps, we learned that when evaluating thermal efficiency, these are the main aspects to take into account. Cooling performance is typically expressed in units of BTU/hr/watt as the Energy Efficiency Ratio, (EER). On the other hand, heating performance is typically reduced to dimensionless units as the Coefficient of Performance. This decision portrays how we implemented concept selection, which include scoring and screening, to narrow down all our ideas and be able to get the "best" for our house taking all of our customer needs and target specifications into consideration.

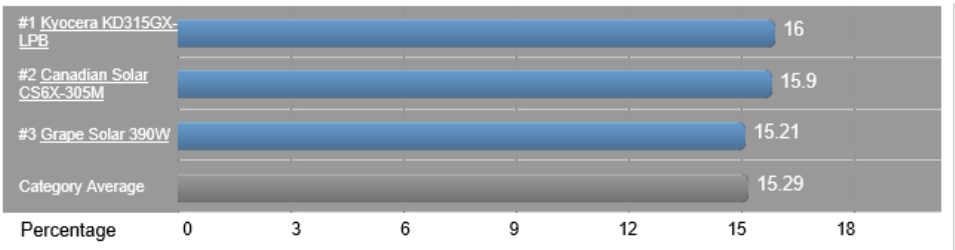

Figure 14: One of the many charts we took into consideration when selecting our solar panel model

Although we did not have a dominant financial concern, we still worked to maintain an affordable house design. Our final estimates was $155,000. Much of this cost came from the overhead of the solar panels, which will eventually pay for themselves. Thus, our team was able to achieve its mission statement to "*design an affordable and desirable home that employs energy conservation and energy capturing techniques in order to produce an annual net zero energy cost.*"