DESIGN FOR KENYA

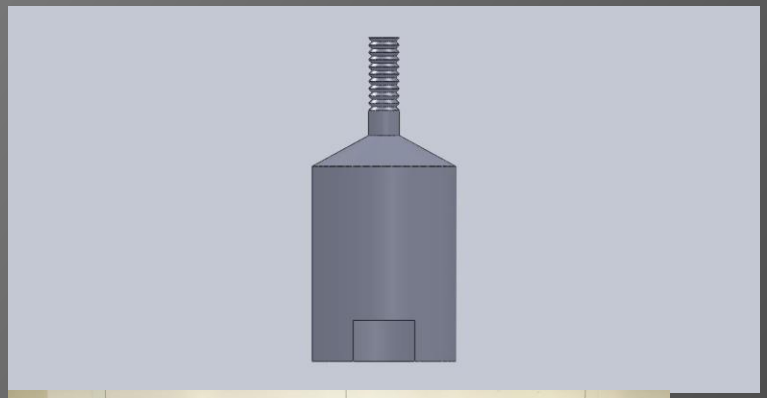

Shell Oil Company
Team NEET and Tidy
Submitted To: Andy Lau 12/10/09
EDSGN 100 Fall 2009

The Envirocover, created by team NEET and Tidy. A device that saves both lives and money. Our product is used to eliminate harmful pollutants from the home environment as well as limiting the amount of fuel needed to cook.

Pg 1: Title page
Pg 2: Problem Statement
Pg 3-6: Research
Pg 7-8: Analysis
Pg 9: Design Benefits
Pg 10-12: Parts and Assembly
Pg 13: Recap

Nick Blanks nrb5112@psu.edu
Erin Derhaag eed5059@psu.edu
Elena Reifenstein emr5190@psu.edu
Tyler Chaussinand tac5170@psu.edu

The Problem:

The process of making a meal in Kenya can be an unsafe and inefficient process. Harmful flue gas emissions must be avoided and fuel use should be as minimal as possible. Our goal is to create a device such that these previous problems are eliminated and also one that creates a sustainable local business.

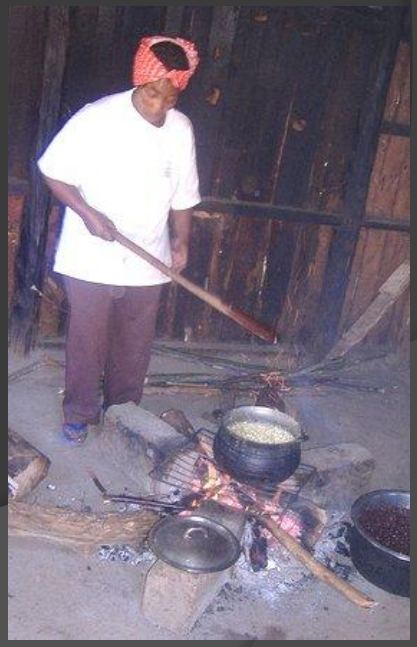

Research

-The most common method of cooking in Kenya is cooking over an open flame.

-There are many designs that exist to replace the inefficient cooking process, most notably the Jiko and the Envirofit.

-80% of urban Kenyans and 10% of rural Kenyans utilize the Jiko.

-Both of these devices possess pros and cons.

-The average salary of the people using these stoves is about 150 dollars per year.

-The cost of a Jiko is approximately 3 dollars while the cost of an Envirofit is approximately 25 dollars.

-The cost of the Jiko is recovered in fuel savings after two to three months.

-The Jiko stimulates better fuel combustion but does not completely eliminate the release of harmful gases.

-The safest way to combat harmful flue gases is to not have any contact with them at all.

-People do not want to add other possible points of access to their homes as this may compromise their security

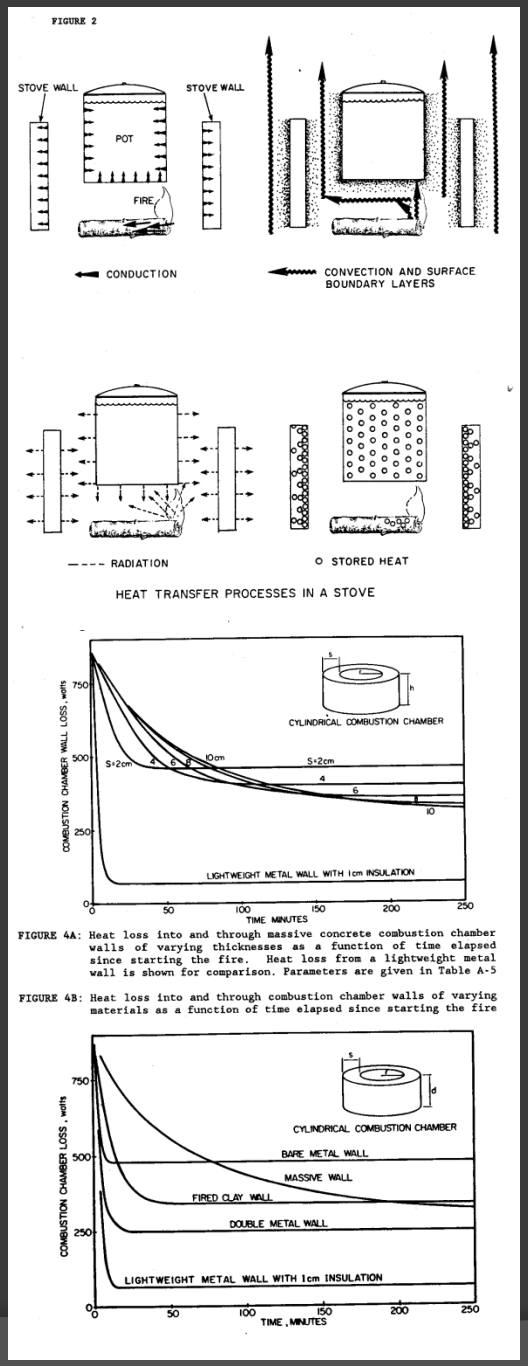

-Heat is lost in a system through conduction, convection, and radiation.

-To lessen the heat lost from a system insulation is used

-Clay acts as a suitable heat insulator and has many benefits

-Clay can expand with heat so measures must be taken to ensure this characteristic does not interfere with any aspect of the cooking process.

Important Links

http://www.hedon.info/DisseminatingImprovedStovesInAfrica

http://www.envirofit.org/?gclid=CMD205nw054CFR9N5QodPiDd8Q

http://www.solutions-site.org/kids/stories/KScat2_sol60.htm

Analysis

-The safest way to protect people from flue gases is to funnel it out of the home.

-The more insulated a system is, the more heat is retained, and less fuel is needed to cook.

-Heat in Pot = Useful heat – heat loss – steam loss

-The Jiko is a device that is owned and trusted by many people in Kenya, therefore an accessory that is based on this device will be more marketable.

-A cover is an effective way of limiting steam loss thus leading to more useful heat.

-Though a chimney may be seen as making the home unsecure, if the opening is small enough, then there is no added security risk.

-Clay is the best material for the Envirocover because it is cheap.

-The making of the clay Envirocover bases can possibly lead to a local business opportunity.

Why the Envirocover?

-Used in conjunction with the already prevalent Jiko.

-Can also be used with Envirofit or most other stoves if that were the case.

-Eliminates all harmful flue gases from the home.

-Retains useful heat, meaning less cooking time.

-Production of the Envirocover may stimulate a local business opportunity.

The Base (Clay)

- 13 “ open diameter, 15” total.
- 1” thick outer rim
- 6” by 4” opening where fuel is fed

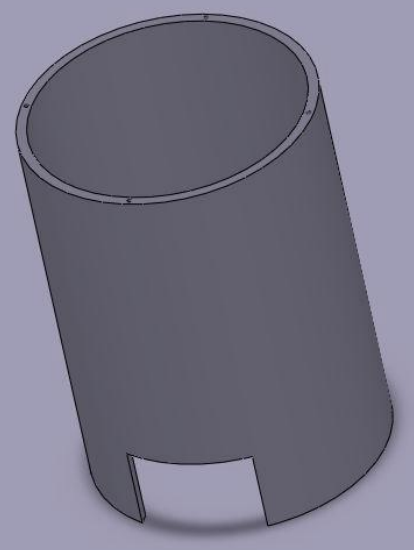

- 19” height to comfortably fit the stove and pot inside

- 4 one inch deep holes for the top to fit into

- Holes lined with metal to prevent the clay holes from warping in high temperature conditions.

The Top (Steel)

- 4 one inch long pieces to fit into the base
- 3” diameter hole on top where chimney hose is secured

-The top limits the steam loss in the system and also directs flue gases through the chimney

The Chimney (Galvanized Steel)

-Constructed of 3” diameter galvanized steel
-Able to withstand temperatures of gases flowing through it
-Fitted with a cap on the outside to restrict any objects or creatures from entering the chimney

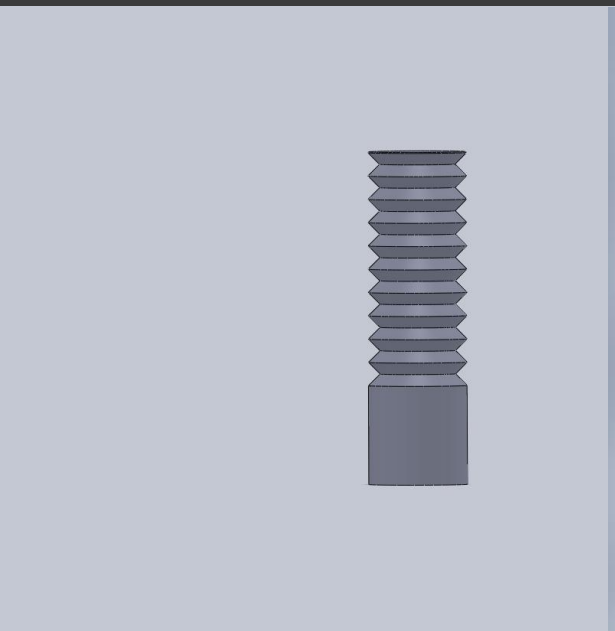

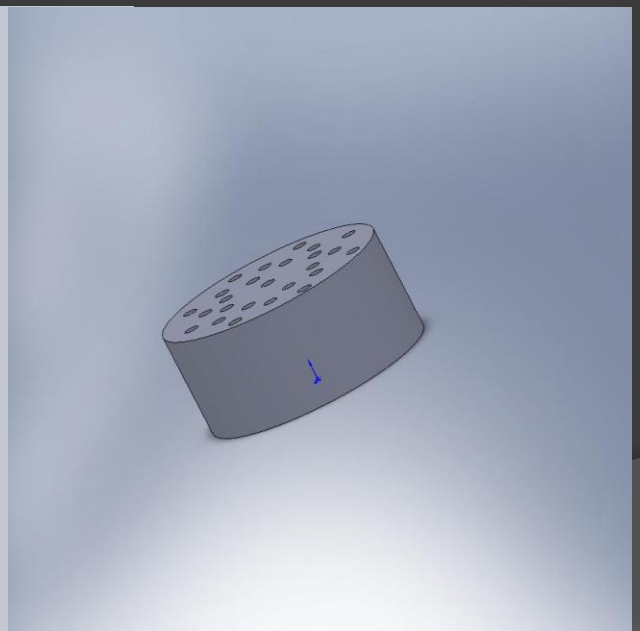

-Chimney is flexible to allow the top to be removed from the base while cooking

Fully Assembled Envirocover
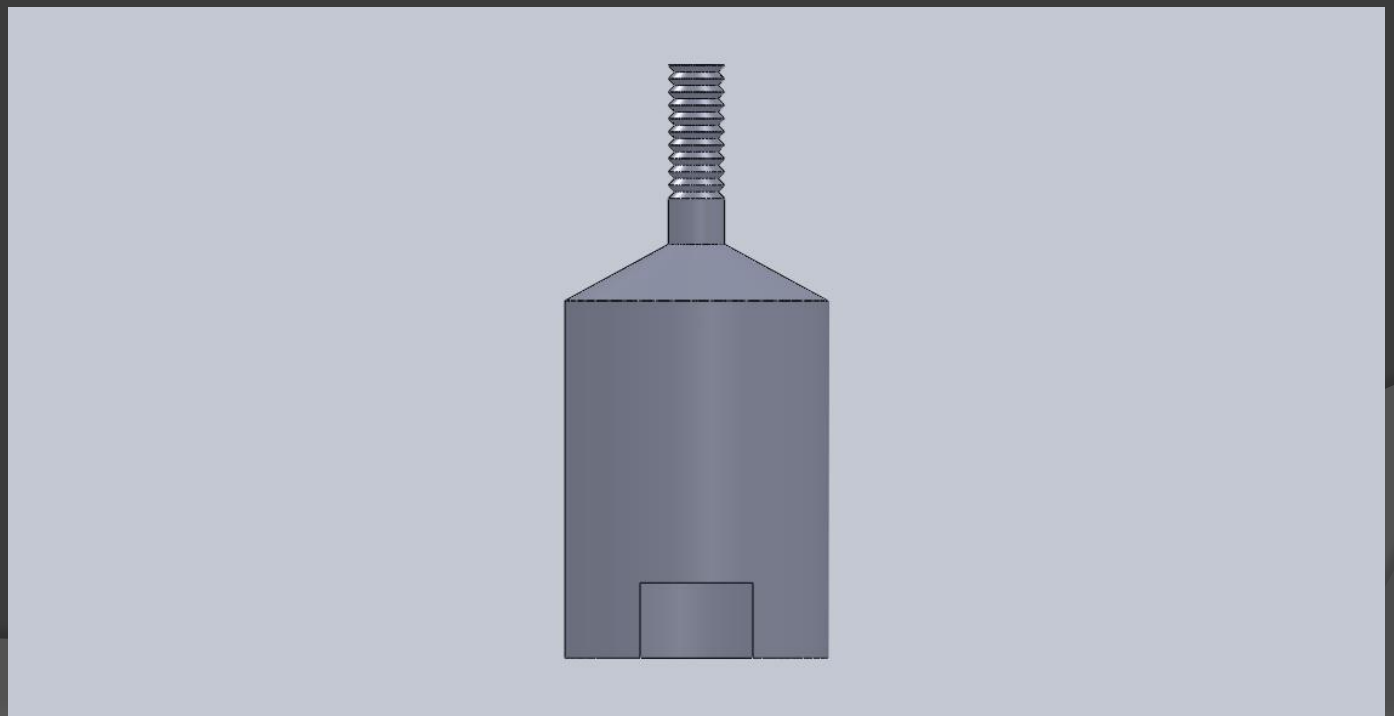
We feel our product is an essential tool in meeting the safety and economic needs of those with these specific cooking devices. The Envirocover is a product that immediately saves lives, and over time also saves money