Project 2: Kenyan Stove

ECO-STOVE

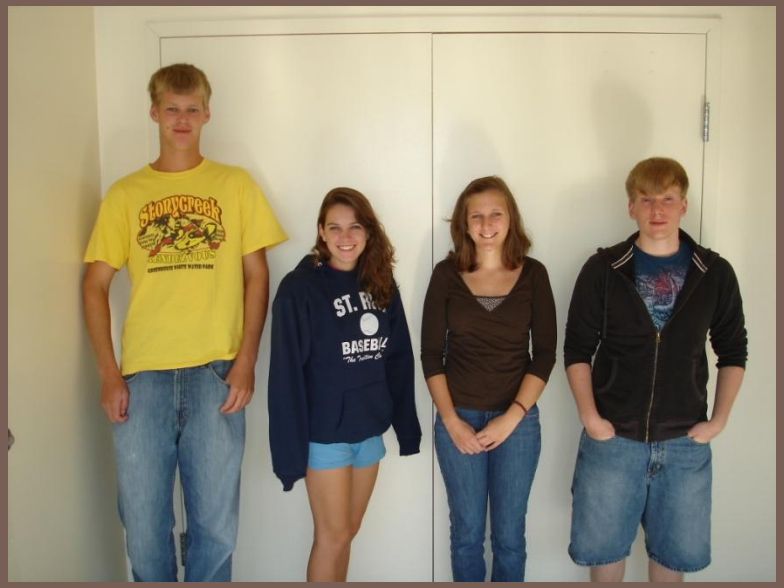

Submitted to:
Professor Lau

EDSGN 100 section 017

Team Solstice:
Kurt Smithgall
Alex Malafarina
Lindsey Mayes
Meghan Gallagher

12/1/2009

Table of Contents

Descriptive Image	3-4
Executive Summary	5
Team Solstice	6
Problem Statement	7
Research	8
Solar Cooking	9-13
Charcoal	14-15
Alternative Fuels	16-17
Biomass Stoves	18-22
Jiko	23-24
Envirofit	25
Works Cited	26
Design Revision	27-28
Analysis	29-31
Final Product Detailed Description	32-34

Description Image:

- Our pot is a two part-system with a recessed pot and ground-fed fuel feed. The base is designed so one can rotate the top and the bottom damper can be adjusted. In addition, flue gas holes at the top allow smoke to escape, while also being able to use different-sized pots. Multiple fuel sources can be used.

Flue Gas Holes- allow for smoke to escape. Multiple sized pots can be used due to these holes

Recessed pot- allows for maximum heat absorption

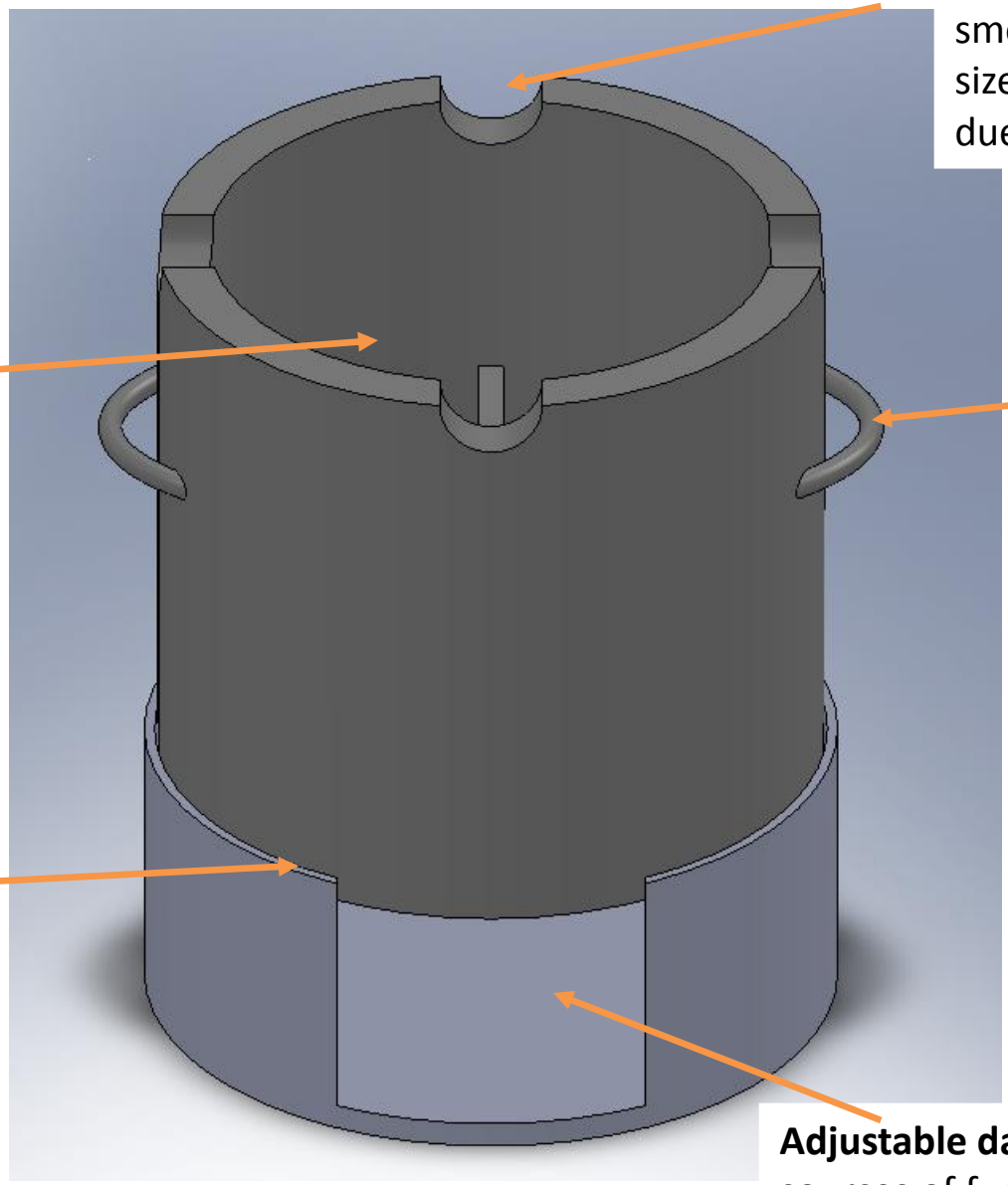

Handles- allow for stove rotation to adjust the damper

Free Rotation- allows the stove to be rotated around the base, opening and closing the damper

Adjustable damper- multiple sources of fuel can be fed through this slot

Executive Summary

- We were asked by shell to design a stove for use in Kenya. The stove must be in between 2-5 US dollars, and reduce carbon dioxide emissions. We may use any fuel available, but the more efficient the better. We designed an insulated two-part stove which rotates within the base to open and close the damper. The pot is recessed and multiple sized pots can be used due to the flue gas holes on the top sides. Kenyans may use any fuel they have available.

Team Solstice

Kurt Smithgall
Kurt's Webpage
KRS5264@psu.edu

Alex Malafarina
Alex's Webpage
AMS5247@psu.edu

Lindsey Mayes
Lindsey's Webpage
LGM5029@psu.edu

Meghan Gallagher
Meghan's Webpage
MKG5095@psu.edu

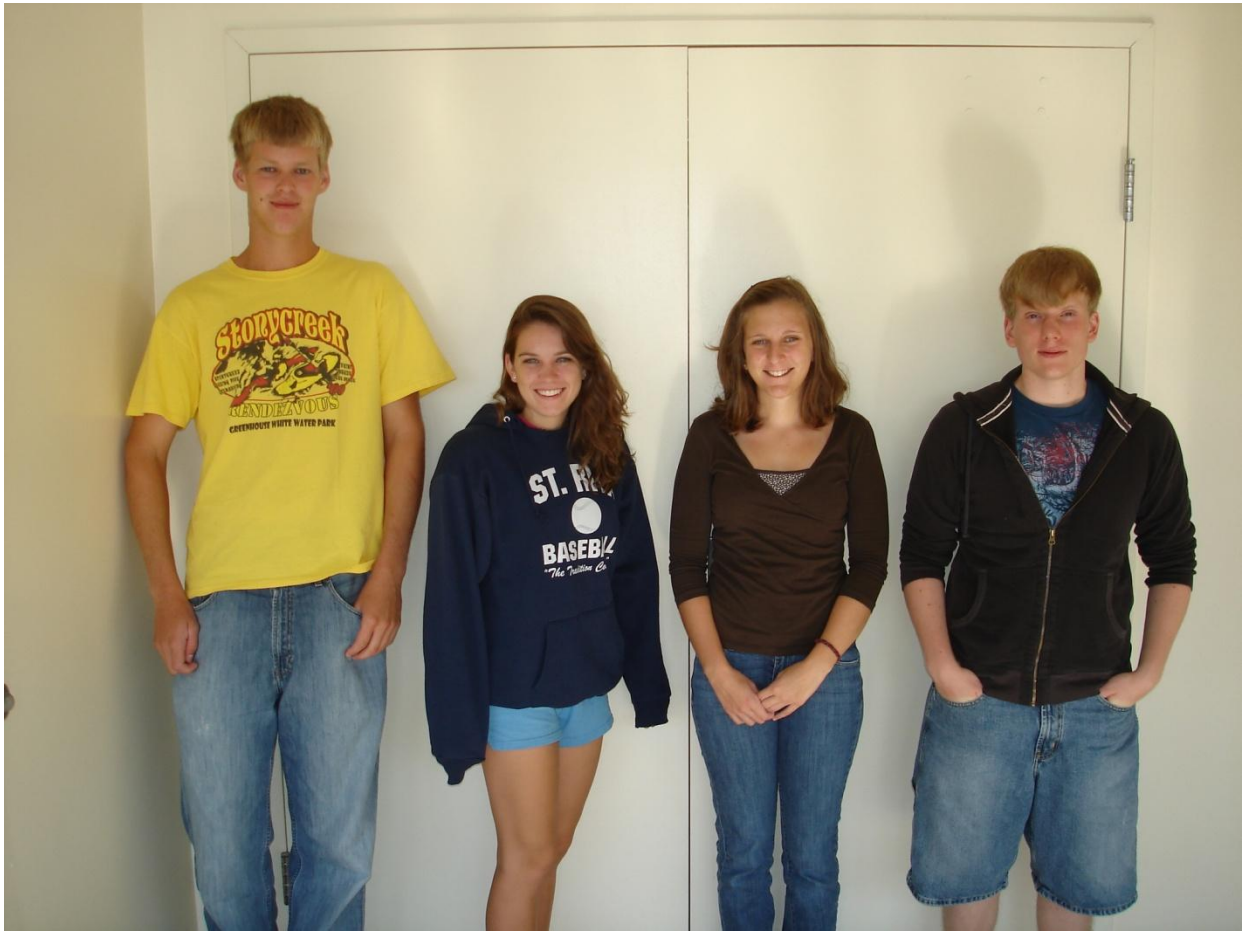

Problem Statement

- The people of Kenya have inefficient and expensive stoves yielding high emissions; therefore, Shell is asking us to create a new, inexpensive yet sustainable stove that is safe to use. We are given the option of utilizing whatever fuel source we see fit, however we must reduce carbon dioxide emissions compared to that of the commonly used Jiko and Envirofit stoves. In addition, our goal is to create a stove which in total costs under $5 US dollars. The Jiko currently costs in between $2 and $3 US dollars and the Envirofit costs $25 US dollars. Although the Jiko is much cheaper, the Envirofit outlasts the Jiko. The Jiko lasts up to 30 months with intensive use, while the Envirofit has a 5 year warranty. Therefore, in order to create a successful stove compared to that of the Jiko and Envirofit, it must be inexpensive, yet outlast the competition.

Research

- In order to adequately prepare to create our stove, we did extensive research in several areas. These areas include solar cooking, biomass stoves, the Jiko and Envirofit, and sources of fuel. With this information, we were able to narrow down our goal to creating an efficient biomass stove.

Solar Cooking

- We decided not to use solar power due to the fact that it may not be efficient in times of inclimate weather; however, we did a lot of research on the subject. Solar cooking is based on three principles: sunlight equals fuel, the conversion of sunlight to heat energy, and the retention of that heat energy for cooking. It is necessary that a solar cooker has an outdoor spot that is sunny enough to produce heat; however it can operate in slightly hazy or cloudy conditions. Dark pots and surfaces convert heat better than light colored surfaces, and some type of encasement is needed, usually glass, that lets light in but doesn't let heat escape, making it possible to reach the same temperature on a cold day as compared to a hot day. In addition, capturing extra sunlight with use of mirrors or other reflectors will increase the temperature and lower the cooking time.
- Solar cooking is dependent upon sunshine and the right climate. Although solar cooking can be done in most countries, it is most efficient in climates that are dry and sunny for at least six months of the year. Solar cooking is possible at high latitudes, but between the equator and 40° is best. Kenya is one of the top 21 best countries for solar cooking.

Three main types of solar cooker styles

- Panel
  - This is an example of a panel style of solar cookers. The advantages to this kind of cooker are that it is easy to make, they are very inexpensive, most can be collapsed, and most are adjustable to the sun. The disadvantages are that most are not waterproof, you cannot fry foods, and the cookers cannot cook at very high temperatures.

- Box
  - This is an example of a box style of solar cookers. The advantages to this system are that they can cook multiple pots at once, it does not always need to be adjusted towards the sun, there are multiple ways to make it, and the size of box can vary without losing much production. The disadvantages are that it takes longer to make than panel style and may be more difficult, it cannot fry foods, and most are not waterproof.

- Parabolic
  - The last style is known as the parabolic style. It cooks faster and warmer than other solar cookers, it can fry foods, and it is more effective than other cookers. However, it is much more complicated to build, it needs constant realignment to the sun, it is more expensive than other styles, and it could be difficult stabilizing the pot at different angles.

Solar Cooking Analysis

- However, after much consideration, we concluded that we did not want to utilize solar power in our design. Kenyans need to eat whether the sun is out or not, and we did not feel as though a solar cooker would be the most effective. In addition, there are many limitations to a solar cooker's design that are not feasible for us to work with.

Charcoal

- <u>Charcoal making:</u>
- Basically, wood is placed in a container and cooked. All the volatile gases are driven off and charcoal remains.
- The concept is simple.
- Start a fire under the container.
- Begin driving off the gases.
- Route these gases back under the container.
- Ignite the gases with the fire already burning under the container.
  - Use these gases to drive of more gas and ignite without adding any other fuel to the fire. When the gas is all driven off the fire dies.
- Let everything cool off, open the container and you have charcoal.

Two basic methods of making charcoal

Direct

- The direct method uses heat from the incomplete combustion of the organic matter, which is to become charcoal. The rate of combustion is controlled by regulating the amount of oxygen allowed into the burn and is stopped by excluding oxygen before the charcoal itself begins to burn. This is the ages old method used by colliers to make charcoal in a pit, pile (clamp) or, more recently, in metal or masonry chambers (kilns). See the links below for more information.

Indirect

- The indirect method uses an external heat source to "cook" organic matter contained in a closed but vented airless chamber (retort). This is usually carried out in a metal or masonry chamber (furnace). The indirect method results in a higher yield of high quality charcoal with less smoke and pollutants and requires less skill and attention than the direct method.

Alternative Fuels

- Ethanol – environmentally friendly
- Roots of wild melons & gourds – environmentally friendly and safer than wood
- Butane is available internationally, requires no priming but loses some performance capability in cold temperatures.
- Isobutane and butane / propane blends offer higher octane performance than butane alone, solving the cold temperature doldrums somewhat.
- Kerosene is available internationally but can be quite finicky to prime and light and it burns with a dirty flame. Still, once properly preheated and burning efficiently (say your fuel mantras) kerosene has a heat output as good as that of white gas.

Fuel Conclusion

- Solid fuel stoves, utilizing twigs and pinecones, are a great alternative for the outdoors where store-bought fuel is unavailable or not practical to carry in the quantities needed. Still, you must be prepared to tinker and fidget with the flame, albeit a very hot one, if and when dry wood is legal and available to use.
- After learning about the different fuel types, we concluded to use materials that would be either inexpensive to buy, or easy for the people of Kenya to find. These materials include sticks, wood, dried berries, etc.

Biomass Stoves

- **How Biomass Stoves Work:**
  - Biomass stoves can run on wood pellets, corn pellets, wheat or rye pellets, and even waste that would be thrown away like cherry pits. First you simply drop a handful of your pellets into a special hopper, which feeds the pellets or pits to the fire at a regular interval. Stoves can feed the pellets automatically since they are so consistent in shape. Blowers are used to distribute the heat from a biomass stove, which can heat a 1,500 to 2,000 square foot home.

Biomass Stoves

- **Pros of Biomass Stoves:**
  - Biomass Stoves run on natural and highly renewable fuel. Original stoves burned fuel which was then released into the environment which sometimes depletes some of our natural resources. Biomass stoves do still emit carbon because of the fuel being burnt, but they are not depleting our limited resources in our world. The fuel is highly efficient which in the long run saves you money that would have been spent on firewood, gas, coal, or other energy sources. Many new stoves come with EPA-approved catalytic combustors that will burn off most of the polluting gases, which can increase stove efficiency by as much as ten percent. The key to finding cheap fuel is using a product that is readily available where you live, for example corn. Many farmers in the Midwest dedicate a portion of their crops to heating.

Biomass Stoves

- **Problems with the Biomass Stove:**
  - The biggest responsibilities include fuel storage and ash and smoke maintenance. Special care must be taken to clean the smoke vent once a year. They also require routine maintenance and should e cleaned every three to four weeks. The fuel also needs to be in a pest-proof container to keep out rodents and insects.
  - Wood doesn't burn, gets hot, and releases volatile gases that then combust. For this to happen we need sufficient temperature. If the wood is heated to 650 degrees Celcius the result is complete combustion. The products of clean combustion are CO2, water vapor, and heat. Dry wood has half the energy per kilogram of gasoline. Smoke is also wasted.

Biomass Stoves

- **Other Types of Biomass Stoves:**
  - The Max Fire, made by Bixby Energy Systems, burns not only pellets but corn as well. It is easy to use and circulates heat through the room quickly. The ashes are automatically purged every forty-five minutes. The operation of the Max Fire is done by an onboard computer that produces a combustion efficiency that Bixby says is more than 99 percent accurate. Bixby claims that the biomass stove will pay for itself in three to four years compared to heating with fossil fuels.
  - The American Harvest, a multi-fuel heater, can hold up to sixty three pounds of fuel and burns corn, wood pellets, soy beans, olive pits, cherry pits, biomass fuel grains, and processed silage. It has nine heat settings on its' digital control board.
  - The Endurance 50F Biomass Furnace from Fahrenheit Technologies is designed to burn shelled corn, wood and grain pellets, and dried cherry pits.
  - Multipot stoves heat two or more pots from a single fire.
  - Channel Stoves increase the pot area exposed to the hot gas by forcing the gas over as much of the surface of a single pot as practicable. Radiant transfer is maximized by placing the pot close to the firebed yet without excessively interfering the combustion.

Biomass Stoves

- **Optimize Heat Transfer:**
  - In order to make the stove more efficient we would need to optimize the heat transfer, or minimize the heat lost. We could minimize the gap between the skirt and pot, while maintaining the cross sectional area of the combustion chamber. Also, making it adjustable to accommodate different sized pots and making the pot as tall as feasibly possible would be solutions to the problem. The use of lightweight insulants such as fiberglass or double wall construction can dramatically lower heat loss. The use of high conductivity aluminum pots saves energy because they conduct the heat of the fire to the food more readily than other pots.

Jiko

- In Kenya, 80% of urban and 10% of rural families use the traditional metal "jiko" charcoal stove for cooking. The remaining rural households use firewood on a three-stone fireplace. Wood is the main energy source for cooking, light, and heat in many East African countries.
- The new stove uses up to 50% less fuel and is light (3-6 kg) and portable. Ideal for low-income families, it reduces the cost of fuel while decreasing cooking time. For example, water can be brought to a boil faster and for a longer period using the improved jiko. Because of its shape, the stove's heat is directed only to the desired location, right under the cooking pot.
- The ceramic jiko lasts approximately 30 months with intensive use, longer than the traditional jiko. The outside casing is made of metal and produced by local crafts-people. The ceramic inner lining is produced by large and small enterprises, including several women's groups.

Jiko

- Since the new stove costs slightly more than the traditional version, there is a need for educating people on the savings in fuel costs. The cost of the jiko can be recovered in fuel savings in 2-3 months. Savings to the country's forests have been estimated at 206 000 tonnes of wood or 570.000 hectares of trees per year, with some 70 000 improved jikos in active use.
- With the success of the domestic ceramic jiko, researchers have developed an improved institutional stove for rural hospitals, clinics, schools, and prisons. These institutions traditionally use fuelwood and charcoal as their main energy sources, and thus contribute to the country's fuelwood crisis. Increased costs of fuel put a major strain on their resources.
- The institutional ceramic jiko is based on the same model as the domestic jiko, with a metal outer shell and a ceramic or vermiculite inner lining. It measures 30 to 50 cm in diameter and can last for up to 5 years. Fuelwood savings can reach 50%. Cooking time is reduced and there is less gas emission than with other types of institutional stoves. As well, a water jacket can be added to the stove to warm water and prevent heat loss from the metal sides of the stove, allowing it to be handled even while in use. The Jiko sells for around $2-$3 US dollars.

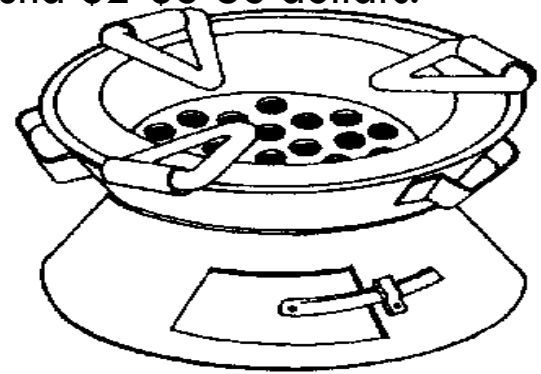

Envirofit

- Compared to traditional cooking fires, Envirofit cookstoves reduce emissions by as much as 80%, use up to 60% less fuel and reduce cooking cycle time by up to 50%. However, it costs approximately $25 US dollars, which is very pricy for Kenyans. The Envirofit does include a five year warranty with the purchase of the product.

Works Cited

- *The Solar Cooking Archive*. Web. 03 Dec. 2009. <http://www.solarcooking.org/>.
- "Solar Cooking." *El Paso Solar Energy Association*. Web. 03 Dec. 2009. <http://www.epsea.org/cook.html>.
- *Solar Cookers International - spreading solar cooking to benefit people and environments*. Web. 03 Dec. 2009. <http://solarcookers.org/>.
- *EERE: Alternative Fuels and Advanced Vehicles Data Center Program Home Page*. Web. 03 Dec. 2009. <http://www.afdc.energy.gov/afdc/>.
- "Charcoal Making at Home, Robert Lea." *The Center for Learning Technologies at Arkansas State University*. Web. 03 Dec. 2009. <http://www.clt.astate.edu/elind/charcoalvalentine.htm>.
- "History of the Biomass Stove." *Free Articles Directory | Submit Articles - ArticlesBase.com*. Web. 03 Dec. 2009. <http://www.articlesbase.com/kitchens-articles/history-of-the-biomass-stove-449754.html>.
- *Centre for Ecological Sciences INDIAN INSTITUTE OF SCIENCE BANGALORE*. Web. 03 Dec. 2009. <http://ces.iisc.ernet.in/energy/paper/tech101/jikostove.html>.
- "Clean Cookstoves Overview |." *Envirofit - Making the World Fit for Humanity*. Web. 03 Dec. 2009. <http://www.envirofit.org/?q=our-products/clean-cookstoves>.

Design Revision

First Design Concept:

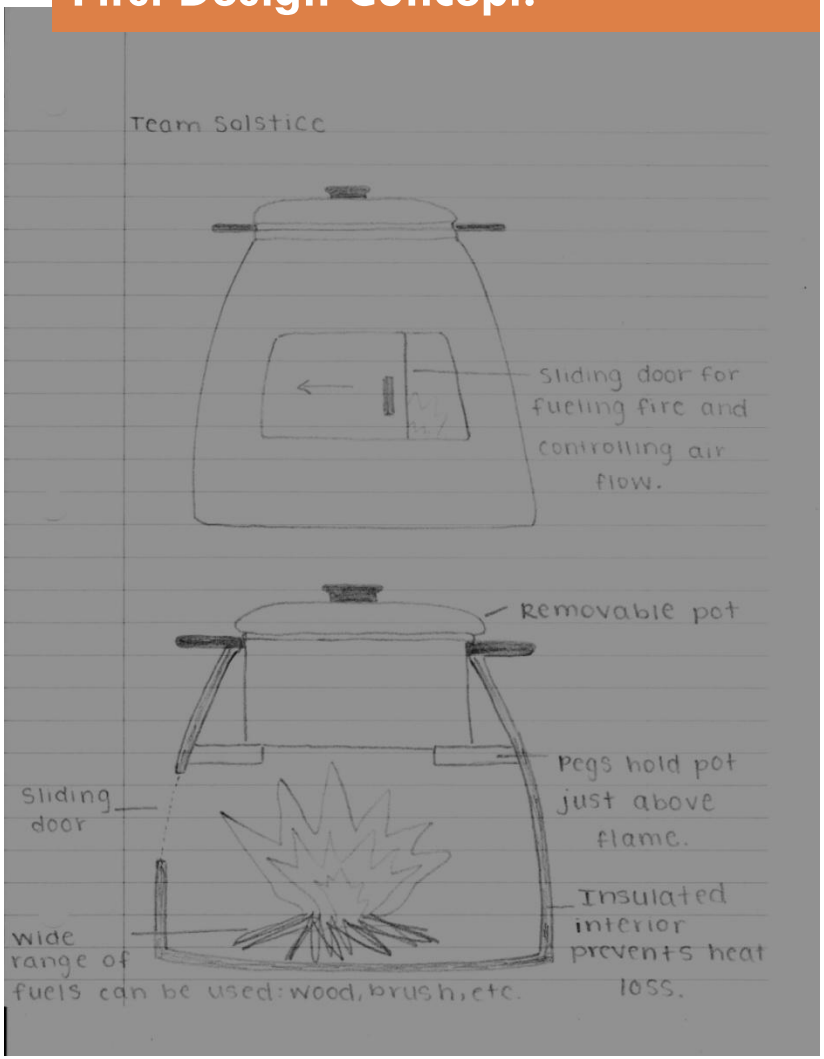

Final Design Concept:

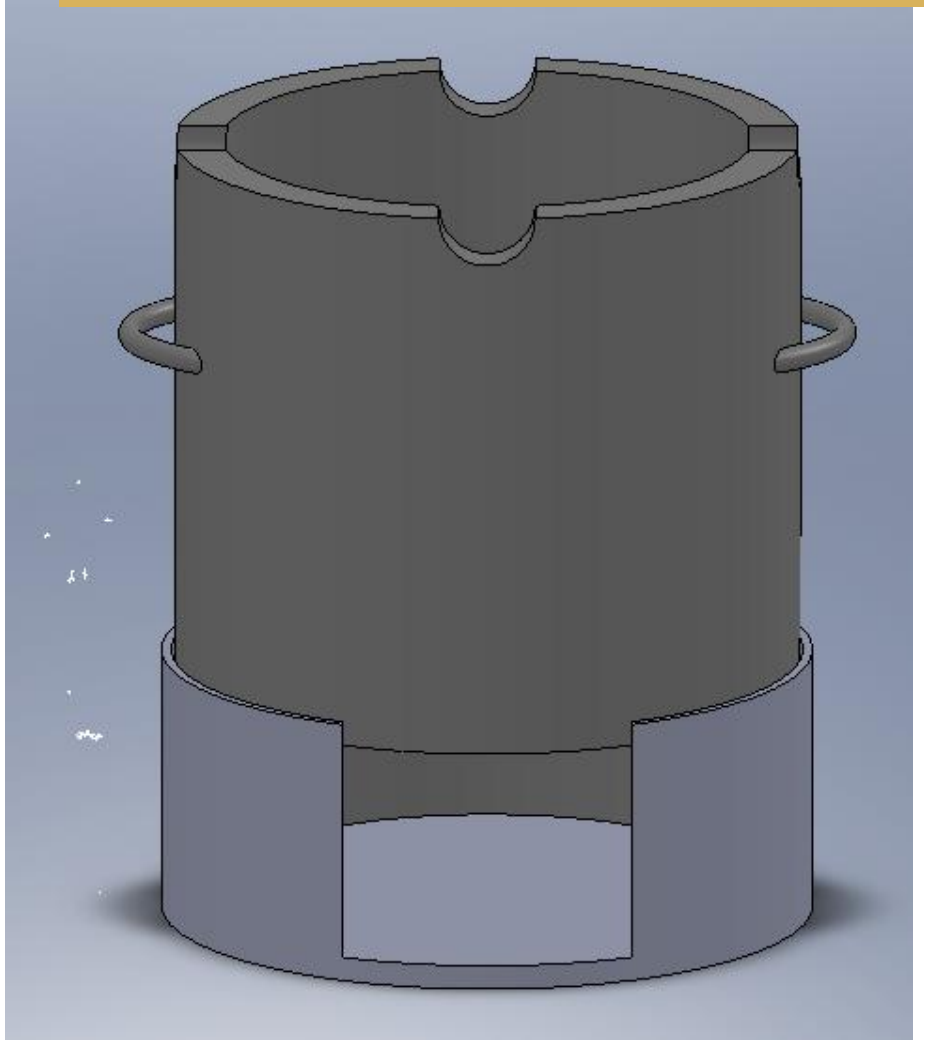

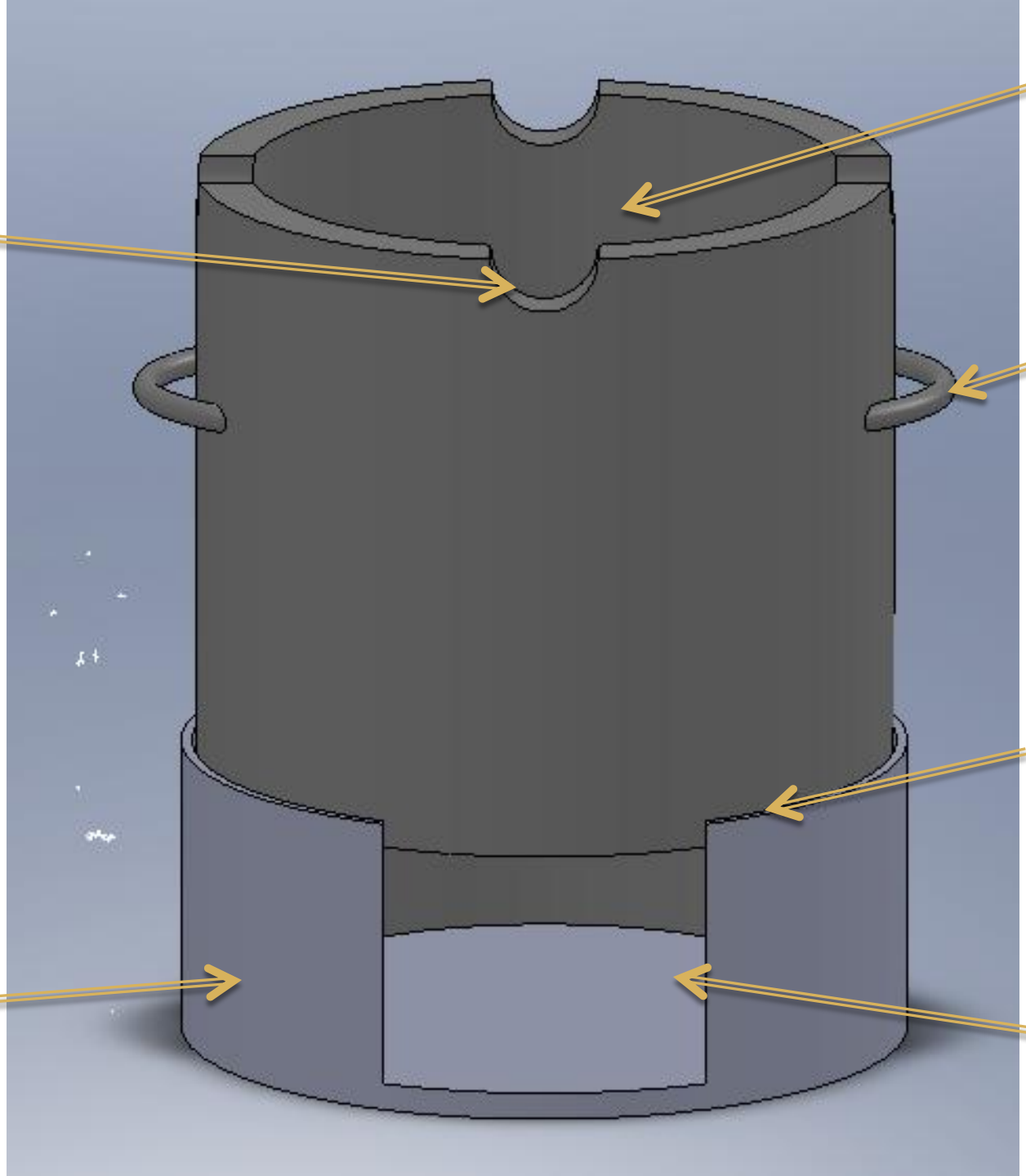
Recessed pot
Flue gas holes
Handles
Free rotation
Base
Adjustable damper

Analysis

- Before we arrived at our final concept, we would design a concept together and then critique it- mentioning both its flaws and its strengths. Our first design had a base with an opening for fuel. The pot would sit on top, and the stove had an attached chimney for smoke. We thought this would be a good design because the women could cook indoors without having to breathe in pollution, however after we researched chimneys, we found that the people in Kenya do not like chimneys because openings in their house could let in thieves.
- Therefore, next we took off the chimney and simply added a lid. Our concept was now a base with an opening for fuel and a pot with a lid that sat on top. We figured that the pot sitting on top had the potential of losing a great amount of heat, and it was not as effective because only the bottom of the pot would get heated.
- For this reason, we created a design with a recessed pot; therefore, both the bottom and the sides of the pot would be heated and the food would be cooked faster. Our door to insert fuel was simply an open and close system, but for our fourth design we decided to make it a sliding door so that it could be used as an adjustable damper.
- We finally critiqued this design with the help of our classmates' comments during the design review. We took several of our classmates' comments into consideration. First, they had said that Kenyans typically do not break up their wood for fuel which posed a problem with our gravity fed fuel slot. To fix this issue, we moved the feed to the bottom so that they can gradually push the logs in, which is similar to what they are used to doing. Second, people thought it would be better if we could use multiple pots of different sizes instead of just one pot. For this, we added flue gas holes to the top sides so any size pot can be used and the smoke would still be able to escape. The base is a separate piece so one can rotate the top which slides the bottom opening open and closed to rotate the top in order to control air flow to the flames. With all these adjustments, our stove is very improved.

Summary of Design

Goals Reached:

- Efficient
  - Heat loss
  - Fuel use
- Inexpensive
  - Can be made entirely from sheet metal, no machining required
- Reduced emissions when sufficiently heated

Key Points:

- *Recessed pot
  - or pot>10” can sit on top
- *Adjustable damper
- Ground fed fuel slot
- Easy to clean ashes
- Insulated body
  - Vermiculite/ash
- Wide range of usable fuels
- *Force hot flue gasses around the pot as they exit the stove
- Small gap between pot and stove to accelerate hot flue gasses

Concept Reflection

Pros:

- Virtually any size pot can be used
- Ground fed fuel slot reduces number of times to refuel
- Adjustable damper to control air flow
- Removable bottom plate allows for easy cleaning
- Cheaper than Envirofit
- Longer lasting than Jiko

Cons:

- Produces small amount of smoke when lighting
- More expensive than the Jiko

Final Product Detailed Description

- Our pot is a two part-system with a recessed pot and ground-fed fuel feed. The base is designed so one can rotate the top and the bottom damper can be adjusted. In addition, flue gas holes at the top allow smoke to escape, while also being able to use different-sized pots. Multiple fuel sources can be used.

Flue Gas Holes- allow for smoke to escape. Multiple sized pots can be used due to these holes

Recessed pot- allows for maximum heat absorption

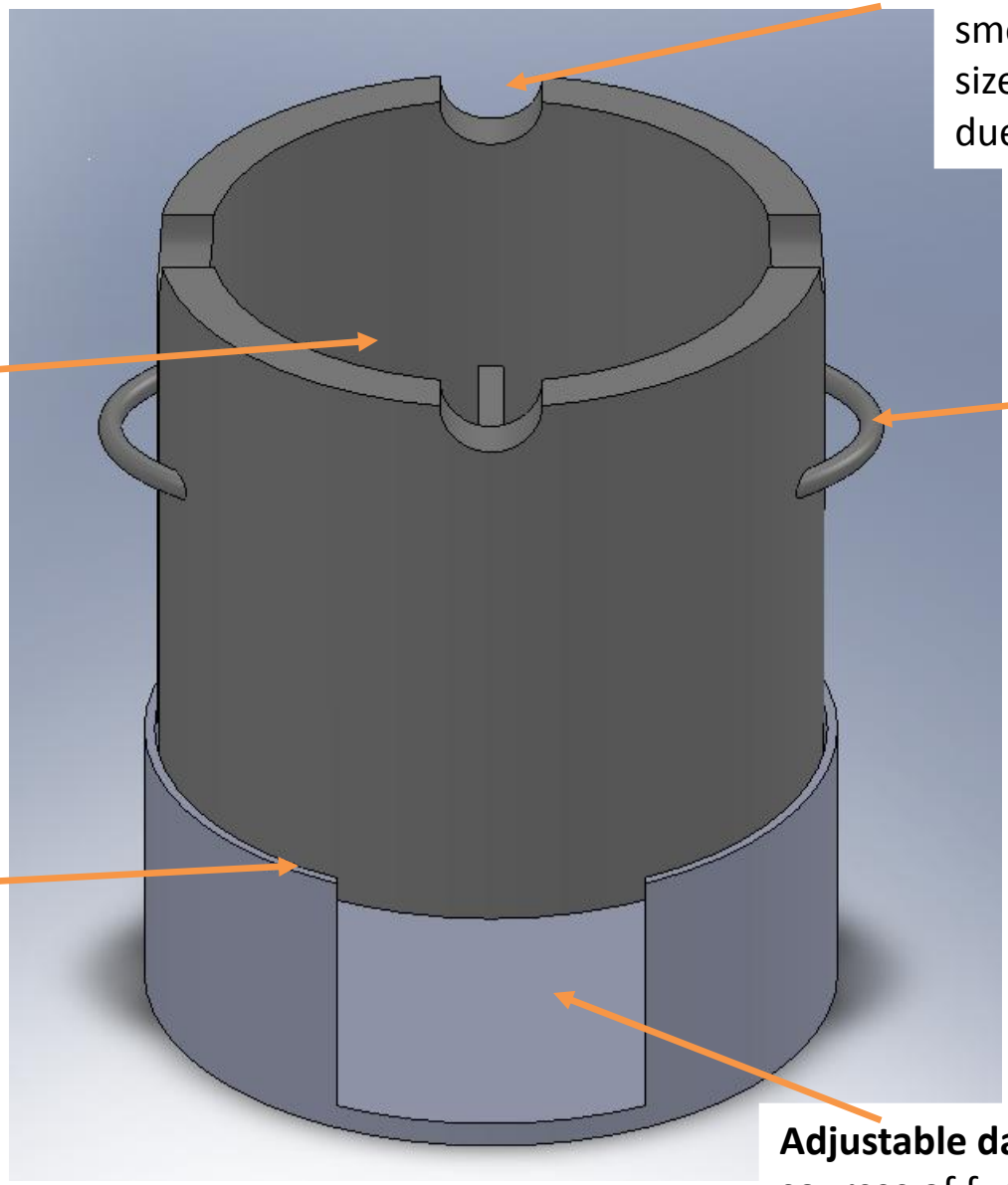

Handles- allow for stove rotation to adjust the damper

Free Rotation- allows the stove to be rotated around the base, opening and closing the damper
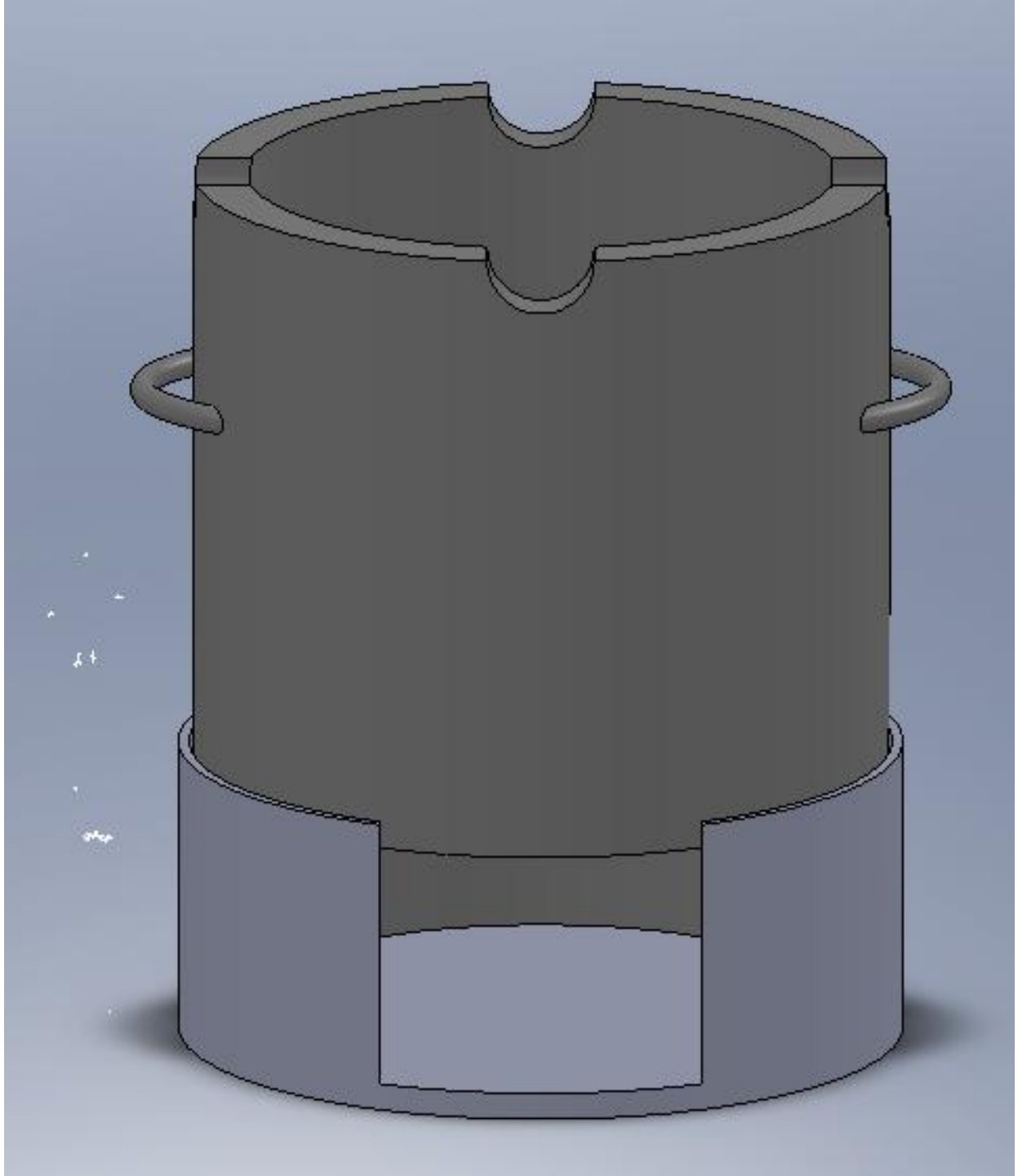
Adjustable damper- multiple sources of fuel can be fed through this slot