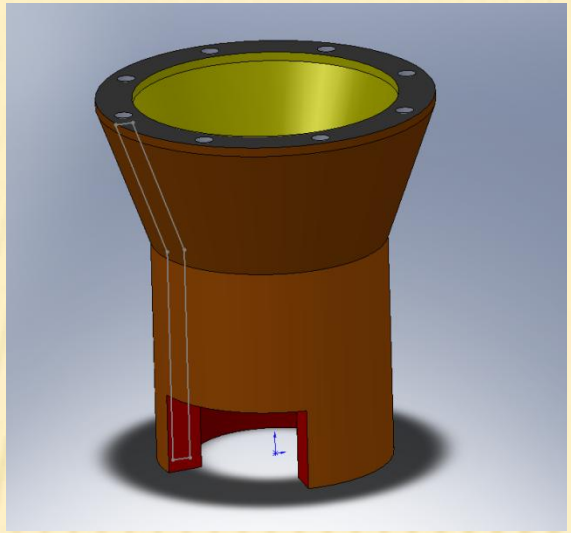

By: IMJoPA

PROJECT 2 DESIGN REVIEW

PROBLEM STATEMENT

- To design a low cost, easy to use, portable cooker that minimizes the use of fuel and waste

TEAM GOALS

- Our team decided on the goals of making a relatively small, new stove to replace the Jiko and Envirofit. We hope to be able to cook quickly and efficiently so that people can more time completing other tasks rather than wasting their time cooking. We hope that our design produces low gas emissions so that cooking inside is not a problem.

RESEARCH

- Solar Cooking
  - Converting light to heat
  - Concentrating sunlight (use reflectors)
  - Problems
    - Availability of solar energy
    - High installation costs
    - Needing a backup system

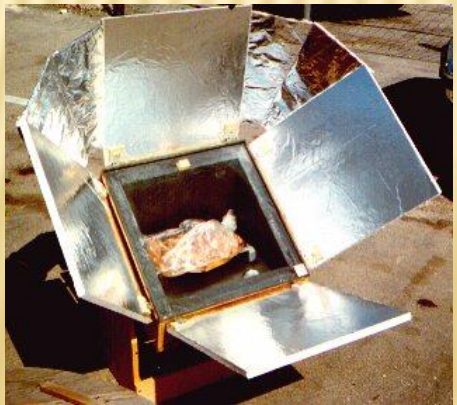

- Types of Cookers
  - Box Cookers (medium to high temperature)
  - Curved Concentration Cookers (quick at high temperature)
  - Panel Cookers (simple and inexpensive)
- Benefits
  - No smoke or pollution
  - Renewable and sustainable
  - Sunlight is free
  - Is safe

RESEARCH

- Alternative Fuel
  - Biomass Pellets
    - Corn, Wheat, Wood
    - Expensive process
  - Twigs
  - Shelled corn (expensive)
  - Bamboo
  - Jatropha (biofuel crop)
  - Banana Peels
- Types of Cookers
  - Rocket Stove
    - Minimal waste
    - Inexpensive
    - Easy to make
    - Less pollution
    - Cheaper fuel

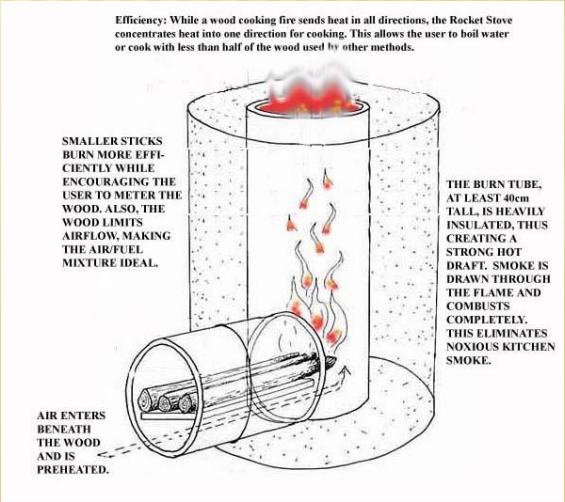

RESEARCH

- Jiko
  - Uses charcoal as fuel
  - Ceramic lining and metal rings at top
  - 25-40% of heat is delivered to the pot
  - 20-40% of heat is absorbed by sotve walls or lost
  - 10-30% of heat is lost as flue gas
  - Reduce fuel by 30-50%
  - Cost: $2-$5
  - Made in Nyeri

- Envirofit
  - Uses biomass (Wood, crop waste, animal dung)
  - Designed to last 5 years
  - Reduces emissions by up to 80%
  - Uses up to 60% less fuel
  - Reduces cook time by up to 50%
  - Cost: $12-$50
  - Enflame Combustion System (Combination alloy and orifice plate)

RESEARCH

- Reducing Heat Loss
  - Pot material
    - Perlite
    - Ceramics
    - Metal
  - Insulator
    - Heavy duty foil
    - Cloth (terrycloth)
    - Heavy materials (rocks, brick, water)
    - Polyurethane foam (low moisture, strong, low density)

Thermal Conductivity of Several Materials

Material	Thermal Conductivity W/m C
Air	0.03
Foam, Polyurethane	0.03
Fiberglass	0.04
Corkboard	0.04
Wool Felt	0.05
Cotton	0.06
Sawdust	0.06
Paper	0.18
Wood	0.1-0.2
Sand	0.3
Plaster	0.5
Glass	0.8
Dry Soil	1
concrete	1.04

ANALYSIS

- A proper insulator is needed to keep the most heat in the system as possible to cook the food thoroughly (high walls)
- Air for feeding fire and letting smoke escape (door, vent, airholes)
- Large cooking area for different size pots
- Cleaner fuel and pollutant (biomass)
- Safe and durable material
- Obtaining the most useful heat
- Cheap fuel and system
- Easy to clean and use (door with handle, no bottom)
- Improving on older models

DESCRIPTION

- Small holes for gas to escape
- Slit for different pot sizes (keeps handle cool)
- Easy to stir and monitor
- Easy access for putting more wood in
- Small and transportable
- Extra gas surrounds the pot instead of being released
- The outside is ceramic while the inside is Envirofit alloy metal.

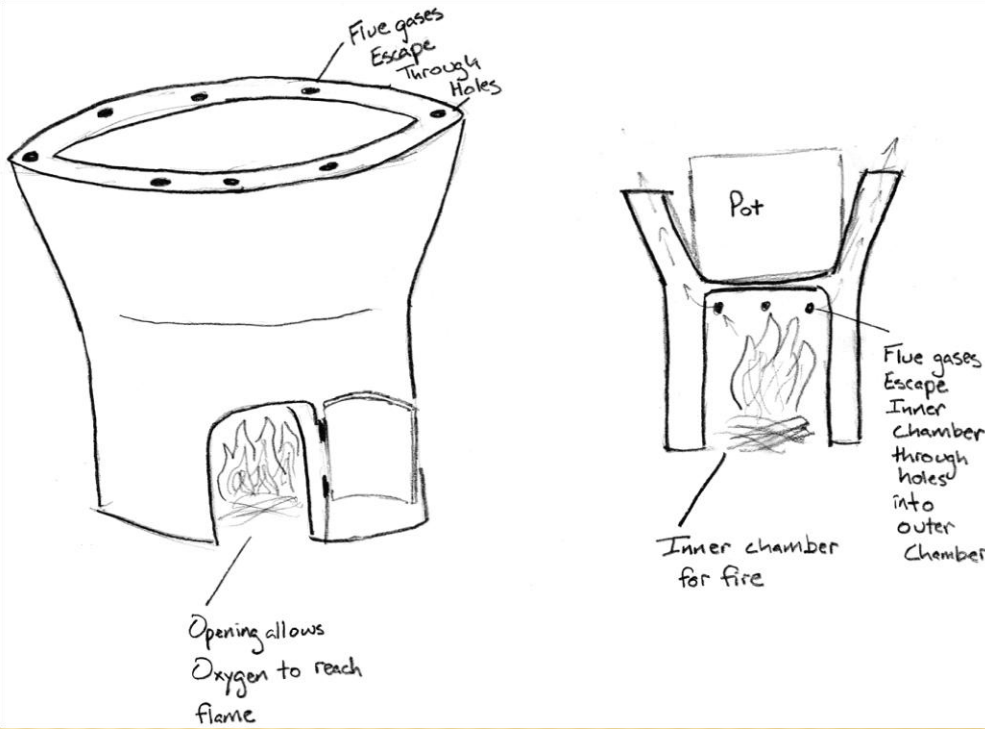

PICTURES

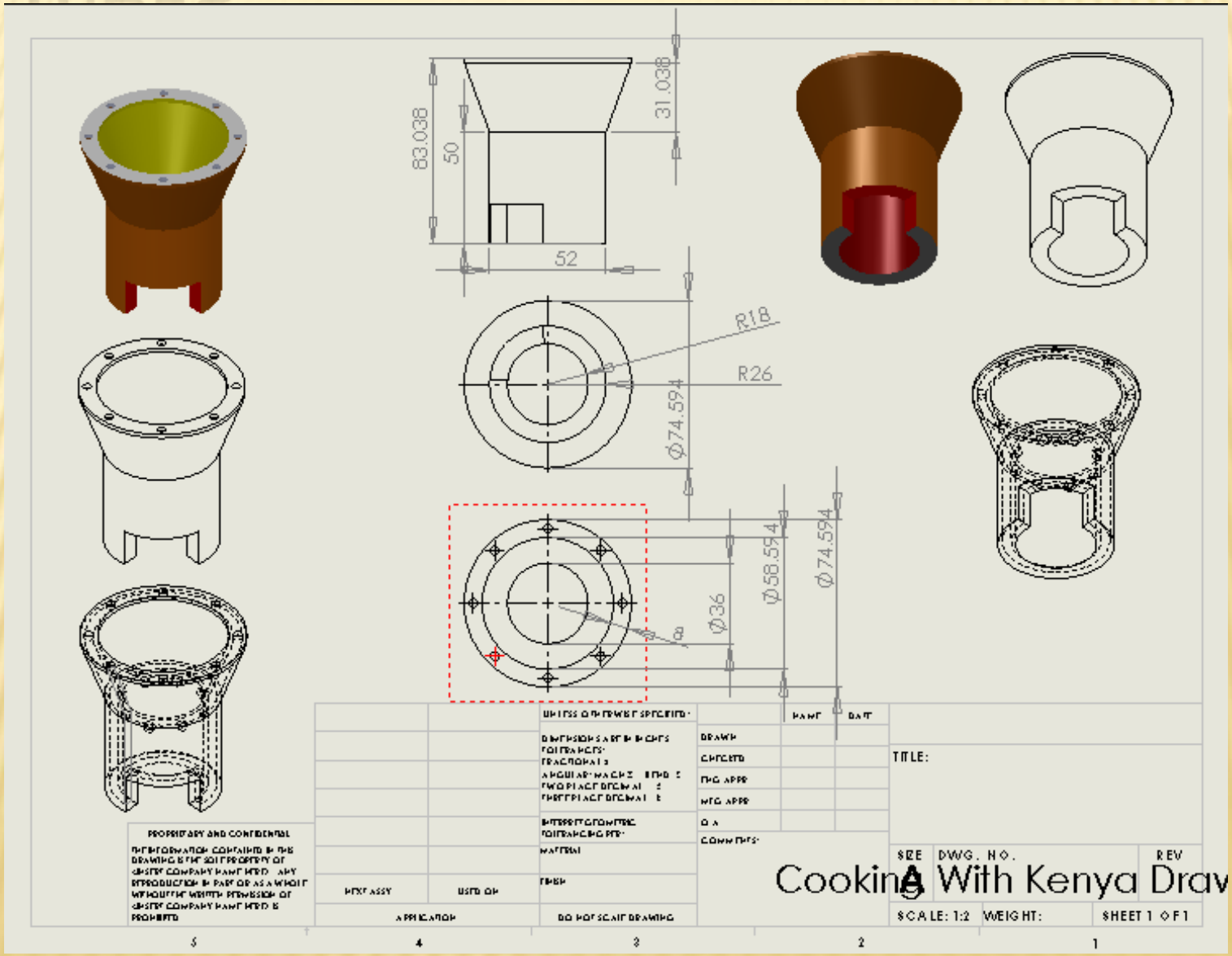
83.038
50
52
31.038
R18
R26
Ø74.594
Ø58.594
Ø74.594
Ø36
8
TITLE:
SIZE
DWG. NO.
REV
SCALE: 1:2
WEIGHT:
SHEET 1 OF 1
Cooking With Kenya Drav