INTRO EDSGN 100
Section 204, Team 1

The Dumpler: Semi Automatic Dumpling Maker

Submitted by (left to right) : Will Chen, Austin Veres, Kyle Kowalczyk, Harrison Mavric, Dallas Hutchinson

Summer 2015

Kyle Kowalczyk

Table of contents

Topic **Page**

Introduction.....2
Abstract …….....3
Problem Statement.....4
Mission Statement 4
Design Specifications 4
Project Management (Gantt chart) 5
Customer Needs Assessment 6
Design Selection Matrices.....7-8
Working Drawings……...9-12
Prototype 13-14
Dumpler Features 15
Working Mechanism.....15
Cost Analysis 16
Conclusion 17
Acknowledgements.....18
References 18

Introduction:

In Intro to Engineering Design 100, Professor Xinli Wu split students up into 7 separate groups and instructed each to construct their own dumpling maker. Each dumpling maker had to fit the following criteria: semi-automatic or automatic , produce 10 dumplings per minute, safe to use, cost $200 at most, and be dishwasher safe. Students must follow the steps of the engineering process (brainstorming, planning, designing, building, etc) to build their final prototype of their dumpling maker; and create a final report that shows the steps each group took to come to their final product.

Abstract:

The design group (Group 1) built a dumpling maker that focused highly on dumpling production variability and being completely semi automatic. The dumpling maker consists of three main separate processes; dough flattening, dough cutting, and dumpling formation, which are all carefully synchronized with each other and all together to the conveyer belt and hand crank . This way, as one increases the crank power, dumpling production increases. The design also features a unique cylindrical dumpling former and expeller, where two halfs of a cylinder come together and form a crimped and perfect dumpling.

Kyle Kowalczyk

Problem Statement:

People needed a way to make more dumplings, in less time, while not compromising on quality.

Kyle Kowalczyk

Mission Statement:

Our mission was to design an effective affordable dumpling maker that makes dumplings at a rate of at least 10 dumplings per minute that is also dishwasher safe.

Kyle Kowalczyk

Design Specifications:

1. Semi or Automatic
2. 10 dumplings per minute on average
3. $200 material cost
4. Safe to use
5. Easy to maintain
6. Dishwasher safe

Kyle Kowalczyk

Gantt chart:

	Task Mode	Task Name	Duration	Start	Finish
1		Problem Statement	4 days	Wed 7/29/15	Mon 8/3/15
2		Mission Statement	4 days	Wed 7/29/15	Mon 8/3/15
3		Gantt Chart	4 days	Wed 7/29/15	Mon 8/3/15
4		Customer Needs Assesment	2 days	Mon 8/3/15	Wed 8/5/15
5		Design Approach	6 days	Thu 7/30/15	Thu 8/6/15
6		Working Drawing	2 days	Tue 8/11/15	Wed 8/12/15
7		Prototype	8 days	Mon 8/3/15	Wed 8/12/15
8		Working Mechanism and Engineering Analysis	6 days	Wed 8/5/15	Wed 8/12/15
9		Cost Analysis	6 days	Wed 8/5/15	Wed 8/12/15
10		Conclusion	6 days	Wed 8/5/15	Wed 8/12/15

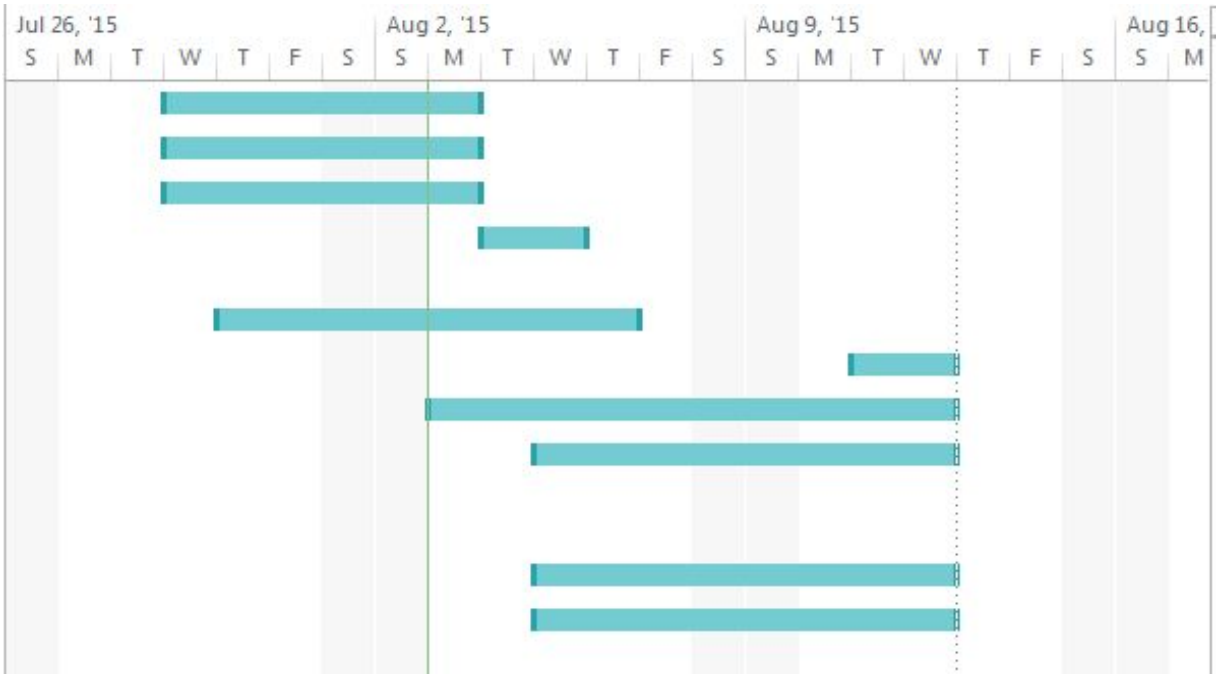

Kyle Kowalczyk

Customer Needs Assessments:

1. Have you ever eaten dumplings?
2. Have you made dumplings at home?
3. Would you consider purchasing a dumpling maker?
4. If so, what features would you like to see in the dumpling maker?

Austin:

Derek Li (18 Year Old Male)

1. Yes, I loved them
2. No, I have always gone out to restaurants when I eat them.
3. Yes, I would consider purchasing one.
4. I would like to see the dumpling maker easy to use

Connor Veres (23 Year Old Male)

1. I have not had them very much, but they are pretty good
2. No, I have always gone to restaurants to have them
3. Probably not
4. The dumpling maker should be easy to use, and easy to clean

Kyle:

Minsoo Choo (19 year old male)

1. Yes, I love dumplings
2. No, I usually just get them at restaurants
3. Maybe
4. Choice of color, durable,

Will:

Andrew Blount (18 year old male)

1. Yes, they are delicious
2. Only once
3. Most likely not
4. I would like it to be durable and easy to clean

Design Selection:

After taking into account what our customers needed (portable, affordable, output,durable, fairly priced), we proposed some ideas that would address these needs and wants and compared different solutions against each other in a design selection matrix.

Design Selection Matrices:

Selection Criteria	Kyle	Harrison	Austin	Will	Dallas
Output	0	0	0	0	0
Durability	-1	0	-1	-1	0
Portability	0	0	0	1	0
Ease of Use	1	1	1	-1	0
Safety	1	1	1	1	0
Cost	0	0	0	0	0
Appearance	0	0	0	0	0
Sum +	2	2	2	2	0
Sum -	1	0	1	2	0
Sum 0	4	4	4	3	8
Net Score	1	2	1	0	0
Rank	2	1	2	3	3
Continue?	Combine	Yes	Combine	No	Revise

Kyle Kowalczyk

Weighted Design Matrices:

Selection Criteria	Weight %	Kyle		Harrison		Reference/ Dallas		Austin	
		Rating	Weighted Score	Rating	Weighted Score	Rating	Weighted Score	Rating	Weighted Score
Output	20	3	0.6	4	0.8	2	0.4	2	0.4
Durability	20	3	0.6	4	0.8	2	0.4	4	0.8
Portability	10	3	0.3	2	0.2	4	0.4	4	0.4
Ease of Use	20	3	0.6	4	0.8	4	0.8	4	0.8
Safety	5	3	0.15	4	0.2	4	0.2	2	0.1
Cost	20	3	0.6	4	0.8	3	0.6	2	0.4
Appearance	5	3	0.15	3	0.15	3	0.15	3	0.15
Total Score Rank		3	3.00	1	3.75	4	2.95	2	3.05
Continue?		No		Develope		No		No	

Kyle Kowalczyk

Working Drawings:

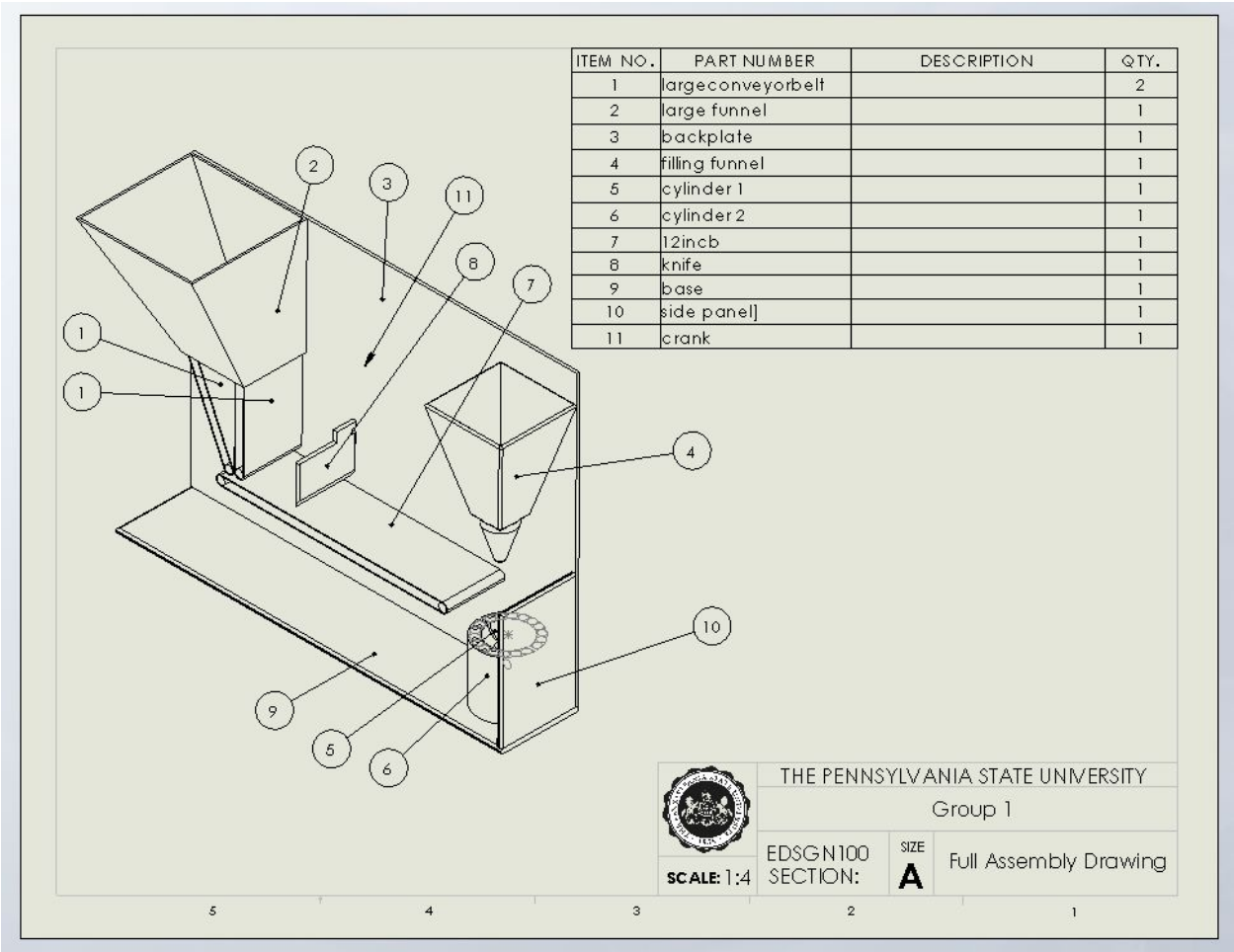

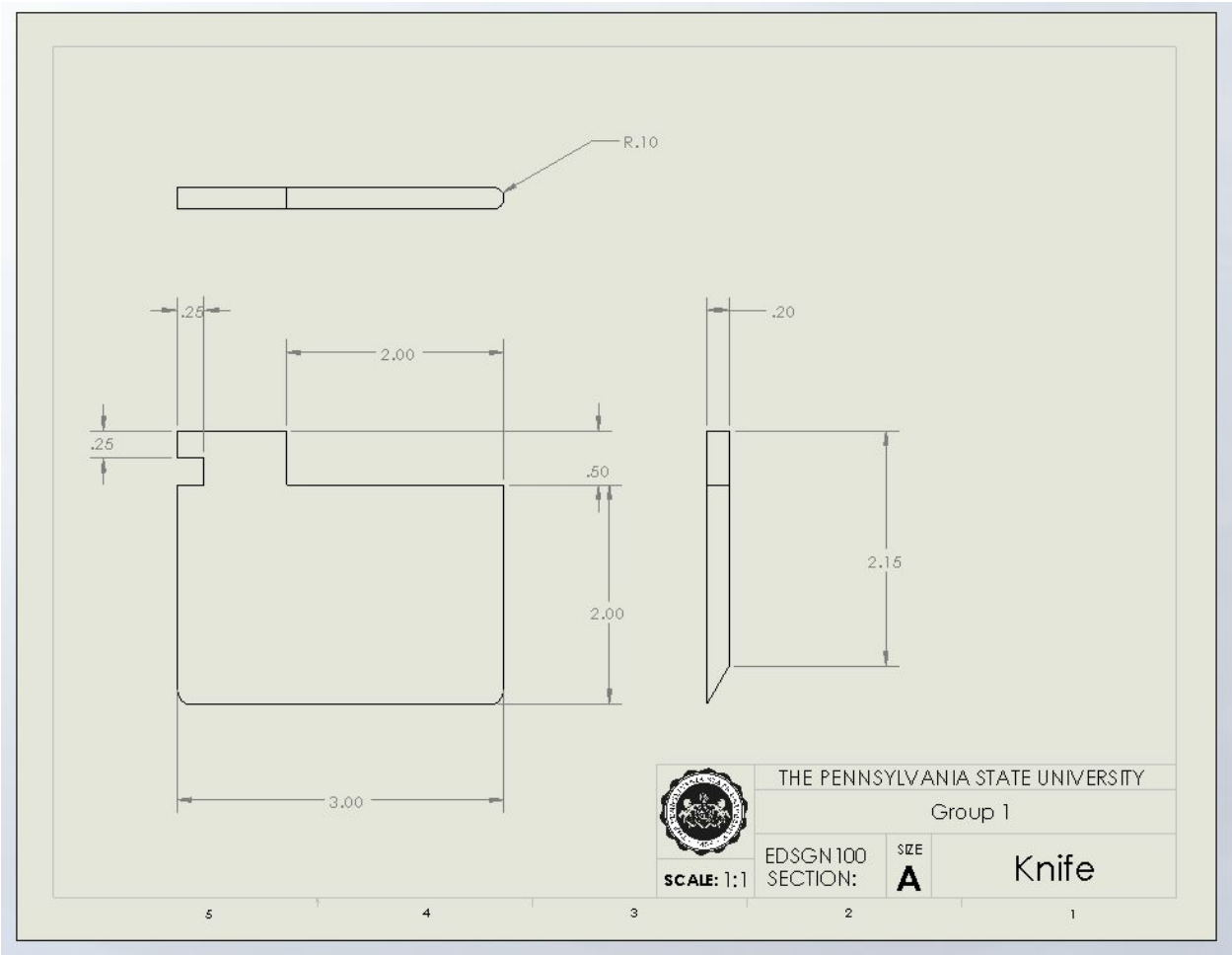
R.10
.25
2.00
.20
.25
.50
2.15
2.00
3.00
THE PENNSYLVANIA STATE UNIVERSITY
Group 1
SCALE: 1:1
EDSGN 100
SECTION:
SIZE
A
Knife
5
4
3
2
1

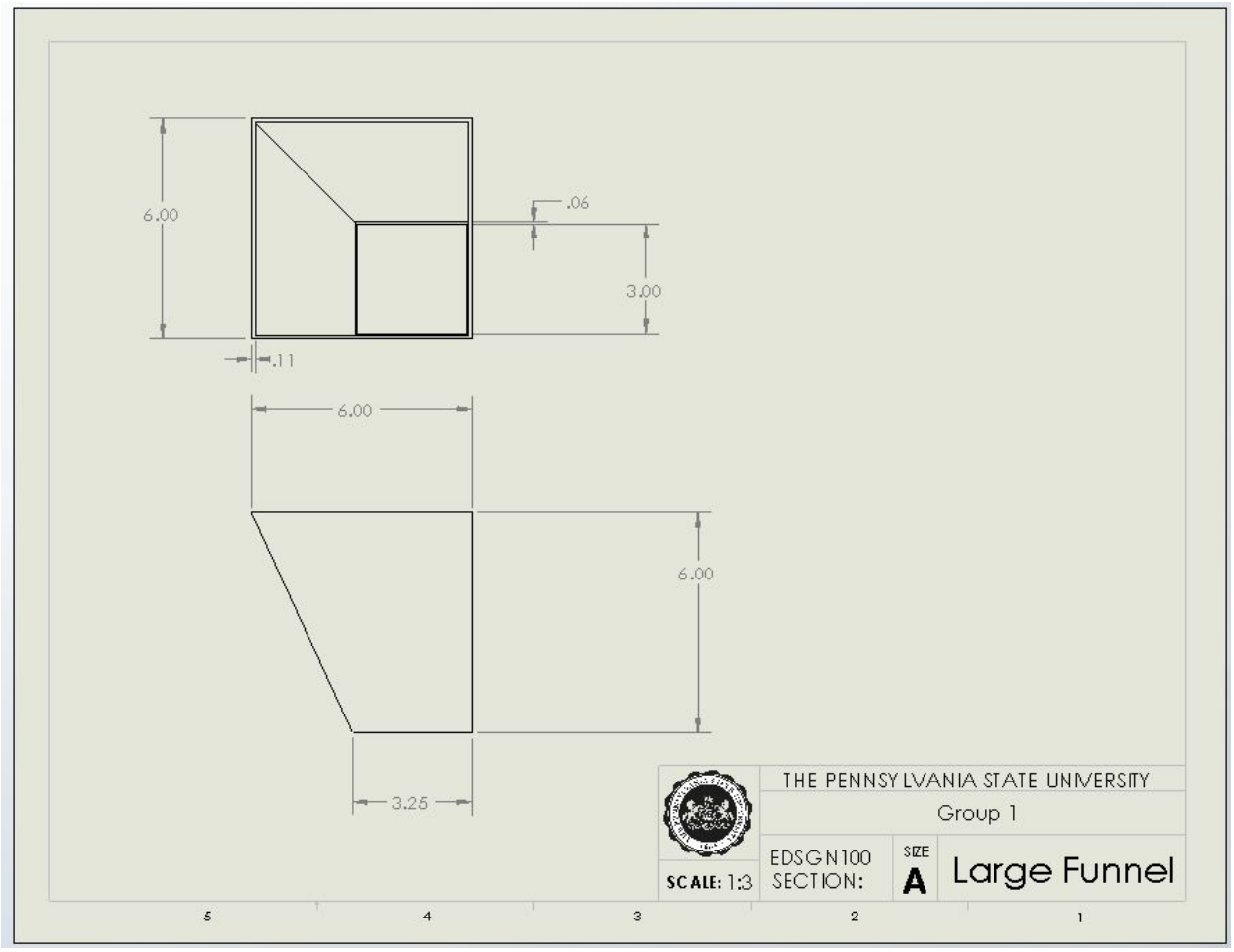
6.00
.06
3.00
.11
6.00
6.00
3.25
THE PENNSYLVANIA STATE UNIVERSITY
Group 1
SCALE: 1:3
EDSGN100
SECTION:
SIZE
A
Large Funnel
5
4
3
2
1

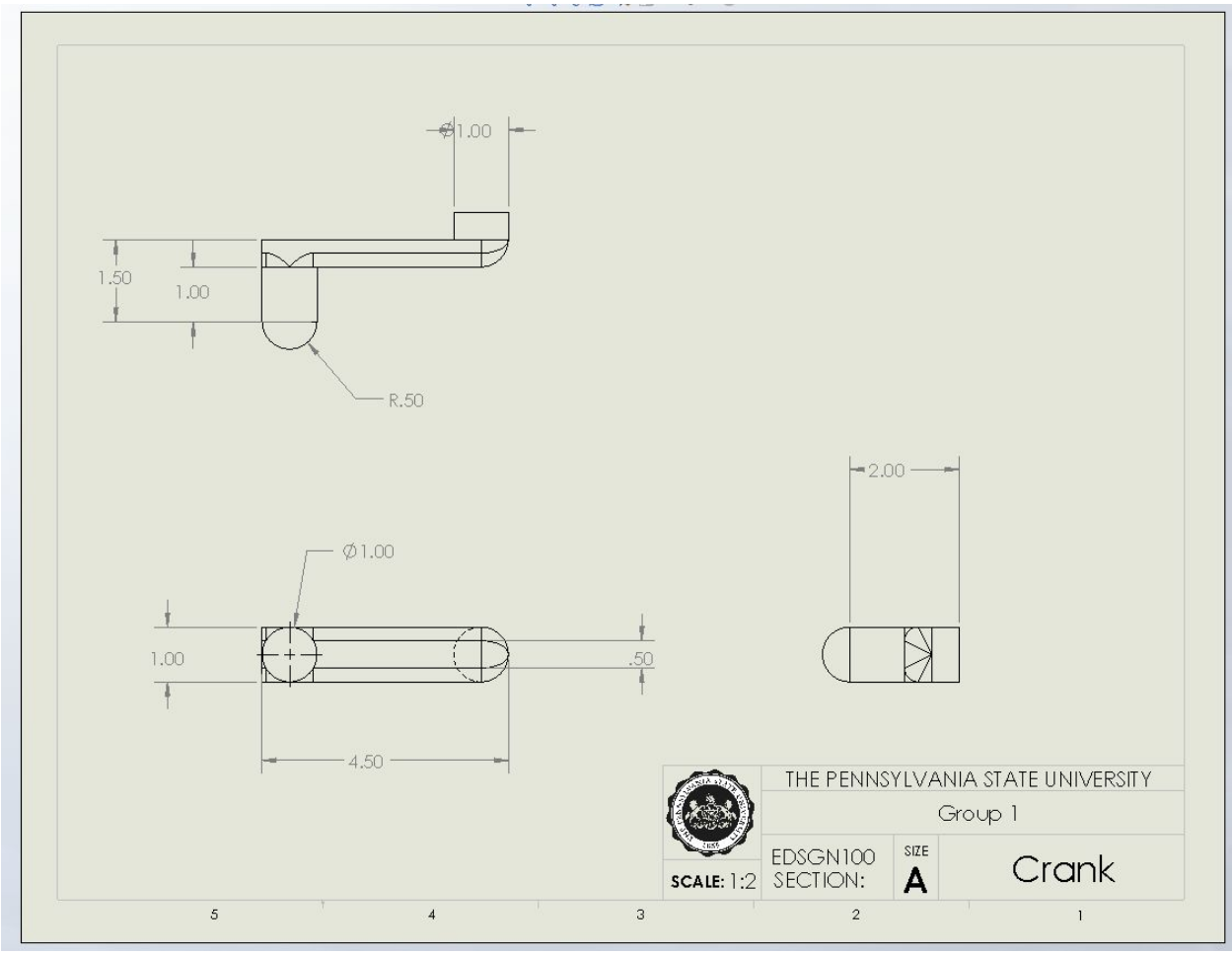

Harrison Mavric

Prototype:

The prototype was constructed in a 1:1 scale, allowing for a perfect representation and execution of the working mechanism.

The Hand Crank powers the whole assembly, and the cylinder in the bottom right folds up onto itself in half, sealing the dumpling. Although due to time constraints we were unable to fully implement the design idea.

Kyle Kowalczyk

Key Features:

- **Variable dumpling production**
- **Compact**
- **Semi Automatic**
- **Easy to maintain**
- **Easy to use**

Kyle Kowalczyk

Working Mechanism:

- A hand crank found on the back would power the dumpling maker
- The dough would be pulled down and flattened by the conveyor belts
- The knife would then cut the dough every 3 ½”
- The cut dough would land on a cylinder, where the filling would drop out of the second funnel onto the center of the dough
- The cylinder is cut in half, allowing it to fold the dough and filling, and cut off the excess dough, creating the dumpling

Cost Analysis:

Item #	Part Name	Material	# of Units	Price per Unit	Total Cost
1	Large conveyer belt	Rubber	2	$2.32	$4.64
2	Large Funnel	Polypropylene	1	$4.89	$4.89
3	Back Plate	Polypropylene	1	$3.54	$3.54
4	Filling Funnel	Polypropylene	1	$3.65	$3.65
5	Cylinder 1	Aluminum	1	$20.25	$20.25
6	Cylinder 2	Aluminum	1	$20.25	$20.25
7	12 inch	Rubber	1	$10.24	$10.24
8	Knife	Stainless Steel	1	$3.21	$3.21
9	Base	Polypropylene	1	$5.23	$5.23
10	Side Panel	Polypropylene	1	$4.25	$4.25
11	Crank	Stainless Steel	1	$7.25	$7.25
Total Price		$87.40			

Kyle Kowalczyk

Conclusion:

The team worked hard to design a shopping cart that met the necessary specifications. The main two concerns for us were feasibility and forming the dumpling. But, with cooperation and willpower , we were able to create a dumpling maker that performed efficiently. With all moving components linked to the crank it is able to function variably and produce a different amount of dumplings based on the customer's needs. Our team created a product which exceeded all given criteria.

Kyle Kowalczyk

Acknowledgements:

We would like to show our appreciation for Xinli Wu and his TA's, Nick and Jake, who provided us with a great amount of knowledge throughout this process.

Kyle Kowalczyk

References:

"McMaster-Carr." *McMaster-Carr*. N.p., n.d. Web. 09 Aug. 2015.

Kyle Kowalczyk