Introduction to Engineering Design
Section 009 - Team 3

Fully Automatic Dumpling Maker 1.0

Submitted By: Chris Welde, Zach Zaltsberg, Nick Mahon
Submitted To: Xinli Wu, Ph.D., P.E.

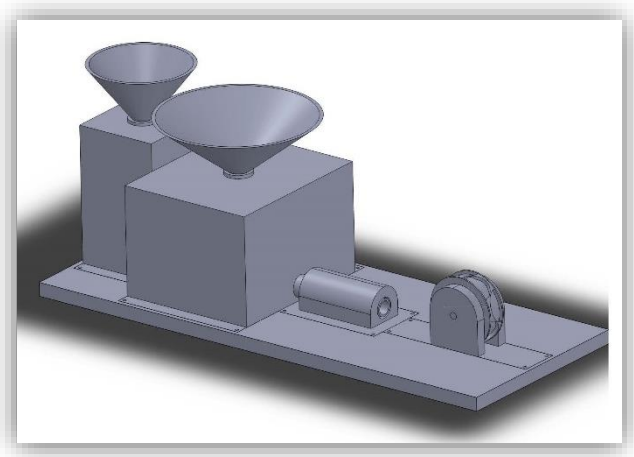

Fall 2015

Abstract:

This report includes information about a fully automatic dumpling maker, designed by Team 3 to produce 30 dumplings/min. The design approach and process leading up to the final prototype is recorded and presented. An engineering analysis explains the material cost and specs, covering how it is innovative, safe, and meets the consumer's needs.

Table of Contents:

Cover Page……..... *Chris Welde*

Abstract…….……....ii *Chris Welde*

Table of contents……..……iii *Chris Welde*

Introduction……..……1 *Nick Mahon*

Description of the design task……...2 *Nick Mahon*

Design approach…….3-8 *Nick Mahon*
Chris Welde

The final design and its prototype……9-16 *Zach Zaltsberg*
Chris Welde

Engineering Analysis…….…..17 *Zach Zaltsberg*

Summary and conclusions……...18 *Zach Zaltsberg*

Acknowledgement……...19 *Chris Welde*

Introduction

The dumpling maker detailed in this report is the product of a challenge issued by Xinli Wu to his Engineering Design Classes. The groups had to do research on the market to understand the target price and specific features of their design and used this information to manufacture a semi- or fully-automatic dumpling maker. The subsequent document details the process, outcome, and takeaways of Group 3 from Engineering Design 100 Section 9, Fall 2015.

Design Task

Problem Statement:

The problem was that Chinese restaurants need a more efficient way to make dumplings quickly due to large consumer demand. Therefore, it was the responsibility of the groups to fashion a new way to make dumplings faster for commercial sale while performing either partially or completely automatically to replace the older and more tedious methods of making dumpling by hand. The product had to also be able to be produced cheaply enough that it could actually be sold to restaurants.

Mission Statement:

The student's mission statement was to research, develop, design, and build a dumpling maker design and prototype of an automatic dumpling maker to be sold to Chinese restaurants all while meeting the criteria laid out by Professor Xinli and maintaining a relatively cheap/affordable price of production.

Design Specifications:

The design specifications of the dumpling maker were laid out clearly by Professor Xinli. They are as follows:

- The dumpling maker must be semi-automatic or automatic
- The dumpling maker must produce more than 10 dumplings per minute, on average. The maximum cost for supplies and materials should be $200, unless the cost can be justified.
- The dumpling maker should be safe as a food processor, easy to maintain, safe to use, and dishwasher safe.

Design Approach

Project Management: (Gantt Chart)

*Note: all dates in 2015	8/24	8/31	9/7	9/14	9/21	9/28	10/5	10/12	10/19	10/26
Gathering Information										
Customer Needs										
Brainstorming										
Design Selection										
Working Drawings										
Prototype Construction										
Design Documentation										

Customer Needs Assessment:

We completed many over-the-phone questionnaires with Chinese restaurants in the Philadelphia and Reading area to help us decide which features would be best. We asked all of these businesses the follower questions:

1. What is the maximum amount of space you would like this machine to take up?

a. Would you like it to sit on a table or be free standing?

2. How fast would you like it to make dumplings? (Dumplings/Minute)
3. Would you prefer the machine to be automatic or semiautomatic? (Crank vs. Electricity etc

. Would you like the machine to make the dough, or do you want to make the dough manually?

4. How would you like the dumplings to look?

. Size of dumplings?

a. Design of dumplings? (Wrinkled or Straight)

b. Shape?

5. Is there anything we haven't discussed that you would want your dumpling maker to have?

6. How much would you be willing to spend on dumpling maker?

After compiling all of the data, the majority of the restaurants interviewed gave the following responses/requests:

1. They requested it sit on a table and take up a space no larger than a rectangle four feet by 3 feet.
2. They asked that the dumpling maker produce no fewer than ten dumplings/minute.
3. They prefered the machine to be entirely automatic and have the capability to make it's own dough.
4. They requested various size and designs for their dumplings with no real uniform consensus among them.
5. They wanted a machine/material that was clean and/or easy to maintain. They really did not want to have lots of maintenance work associated with the machine after buying it.
6. They said that it depends on the features in the machine and would be willing to negotiate solely based on a final product.

Concept Generation:

Our concepts were inspired through extensive research on the internet. We looked at countless models and videos over the first few weeks of the project and developed several design ideas concentrated around a couple overlying features. These features spawned to fulfill two main goals: 1) to waste as little material as possible (since, while producing thousands of dumpling makers, all fiscal wastes would be greatly magnified) and 2) to keep the mechanism very compact as to fit into any area it may be needed whether that is a kitchen in an individual's home, or a kitchen in a large restaurant. We settled on these top two characteristics after conversing with several restaurants about specific features that were desirable. We also decided to keep the machine smaller (hence why it rests on a table) to reduce production costs in order to keep the cost under the price threshold of $200.

Instead of each group member generating their own ideas, we collectively sat together and performed an unrestricted brainstorming session to better incorporate ideas from all our group members. Then we used a decision matrix to narrow down our designs. We did this by scoring each design and picking the winner based on score.

Concept Generation(continued):

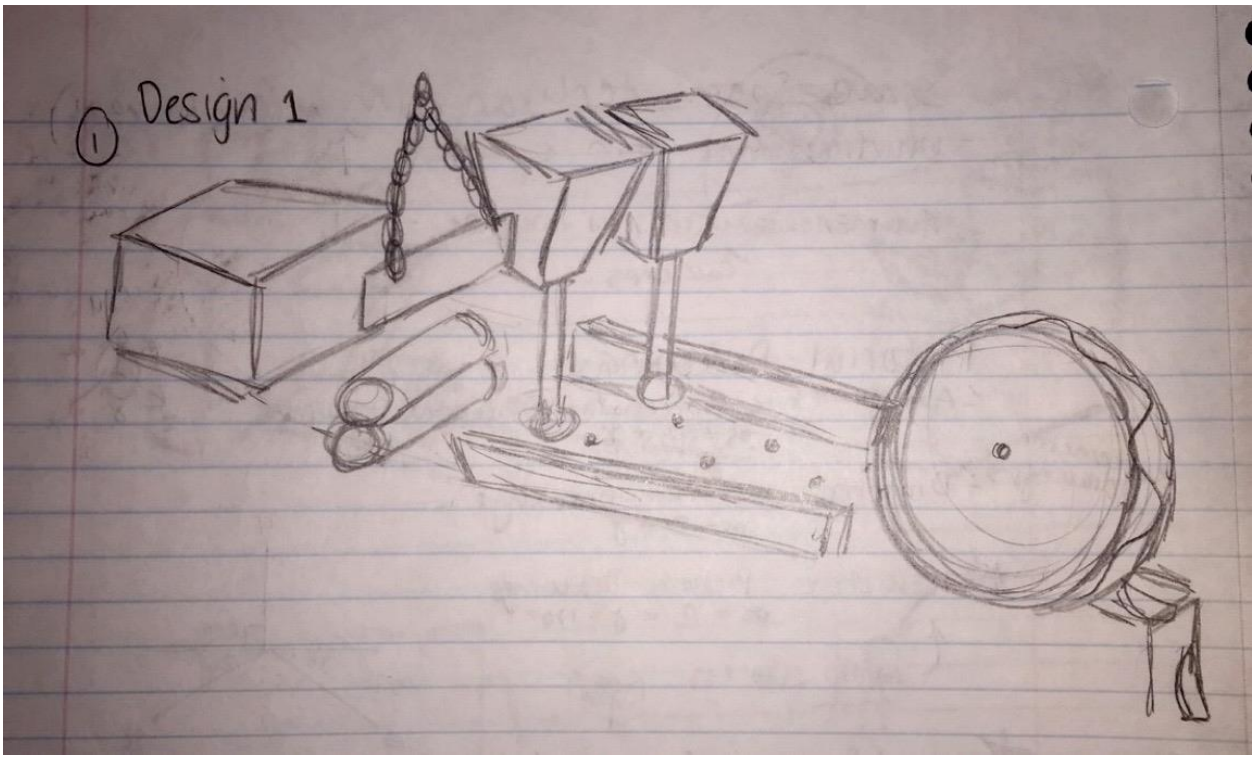

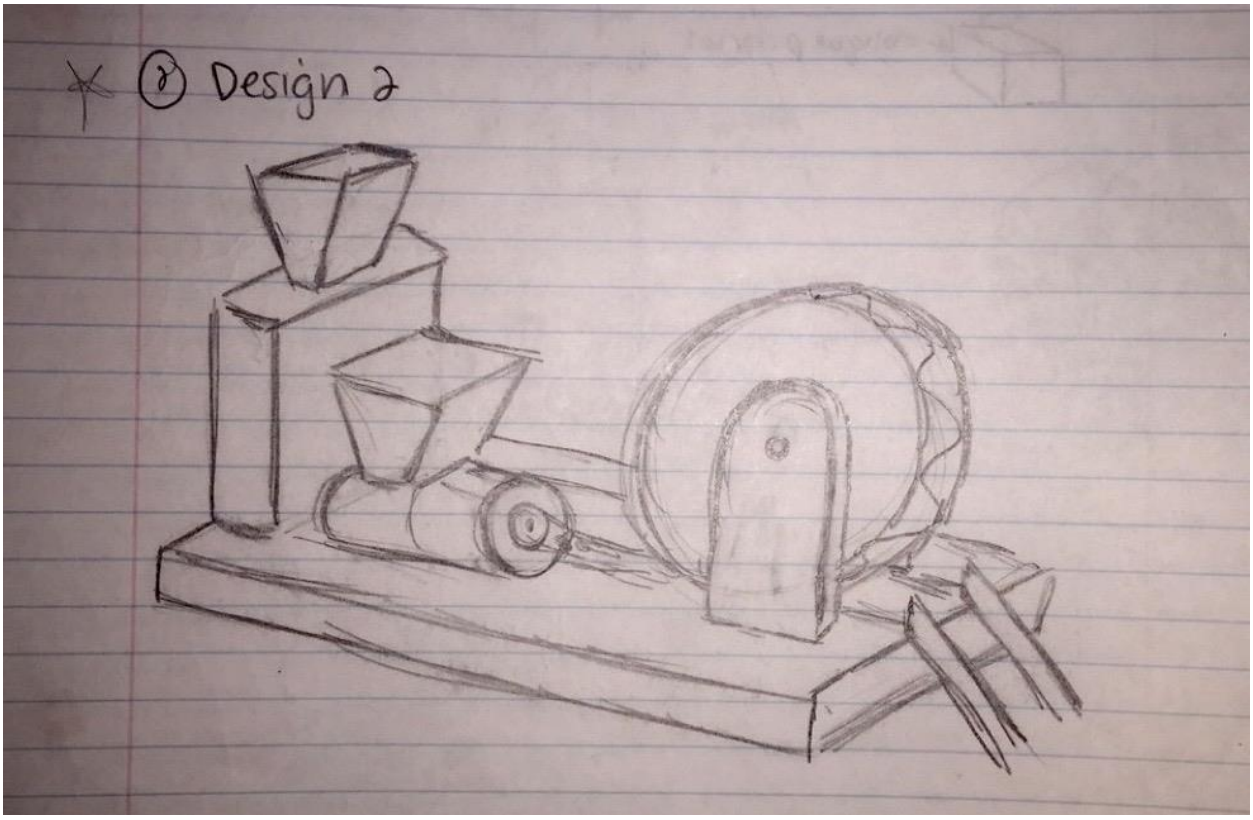

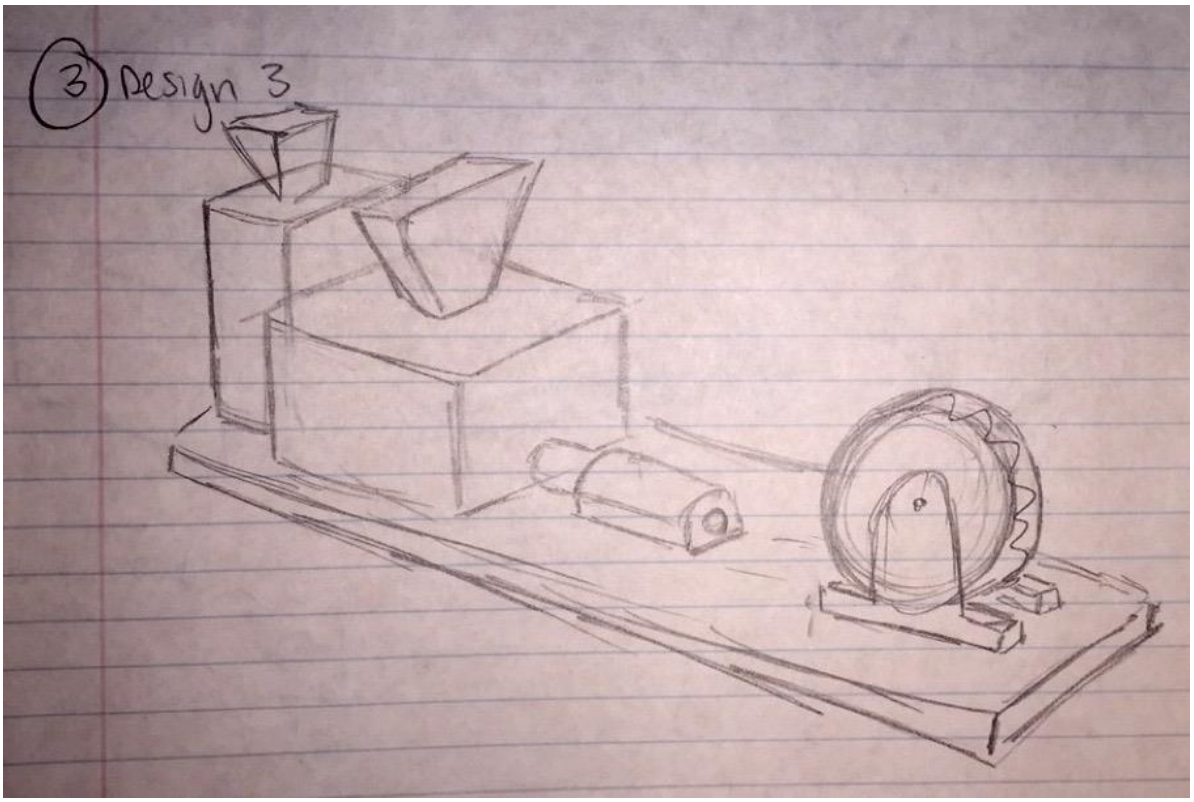
3 Design 3

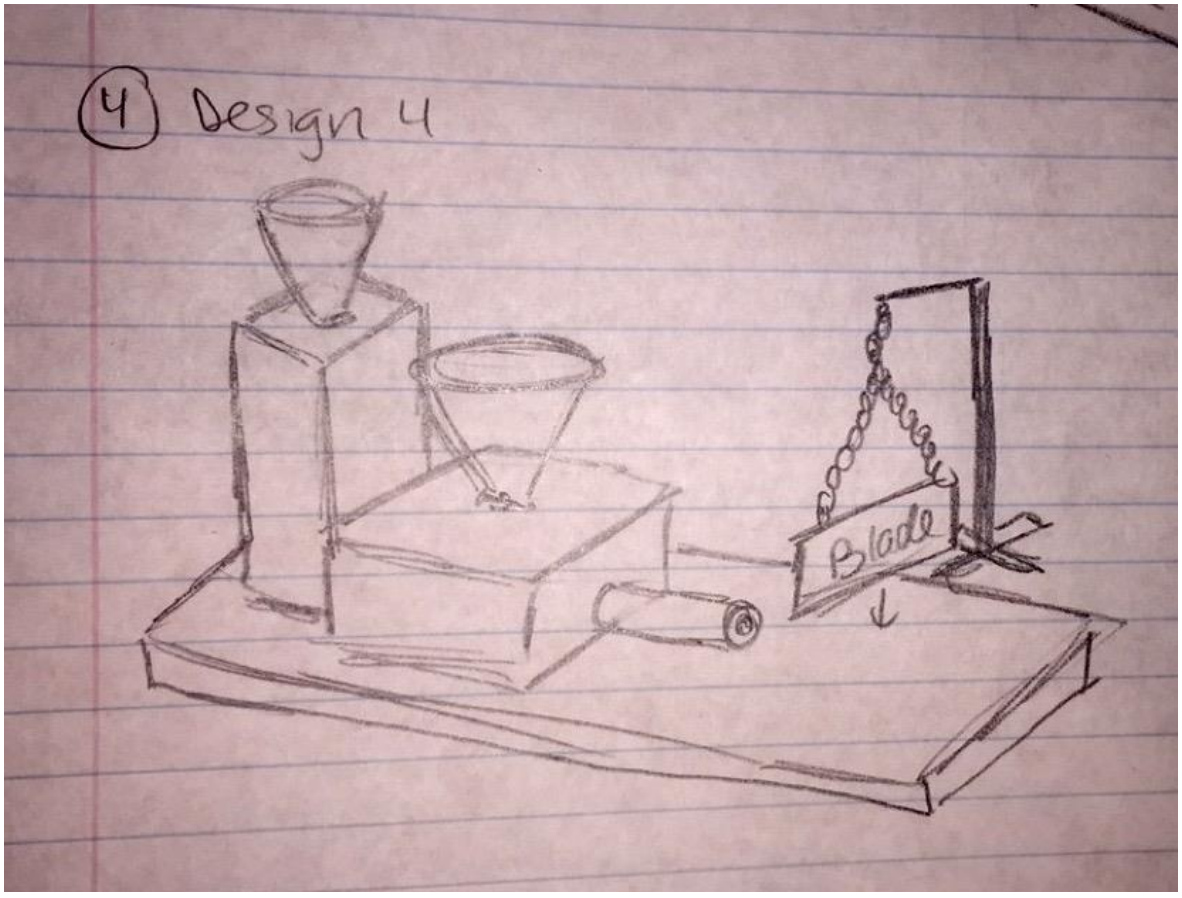
4 Design 4
Blade

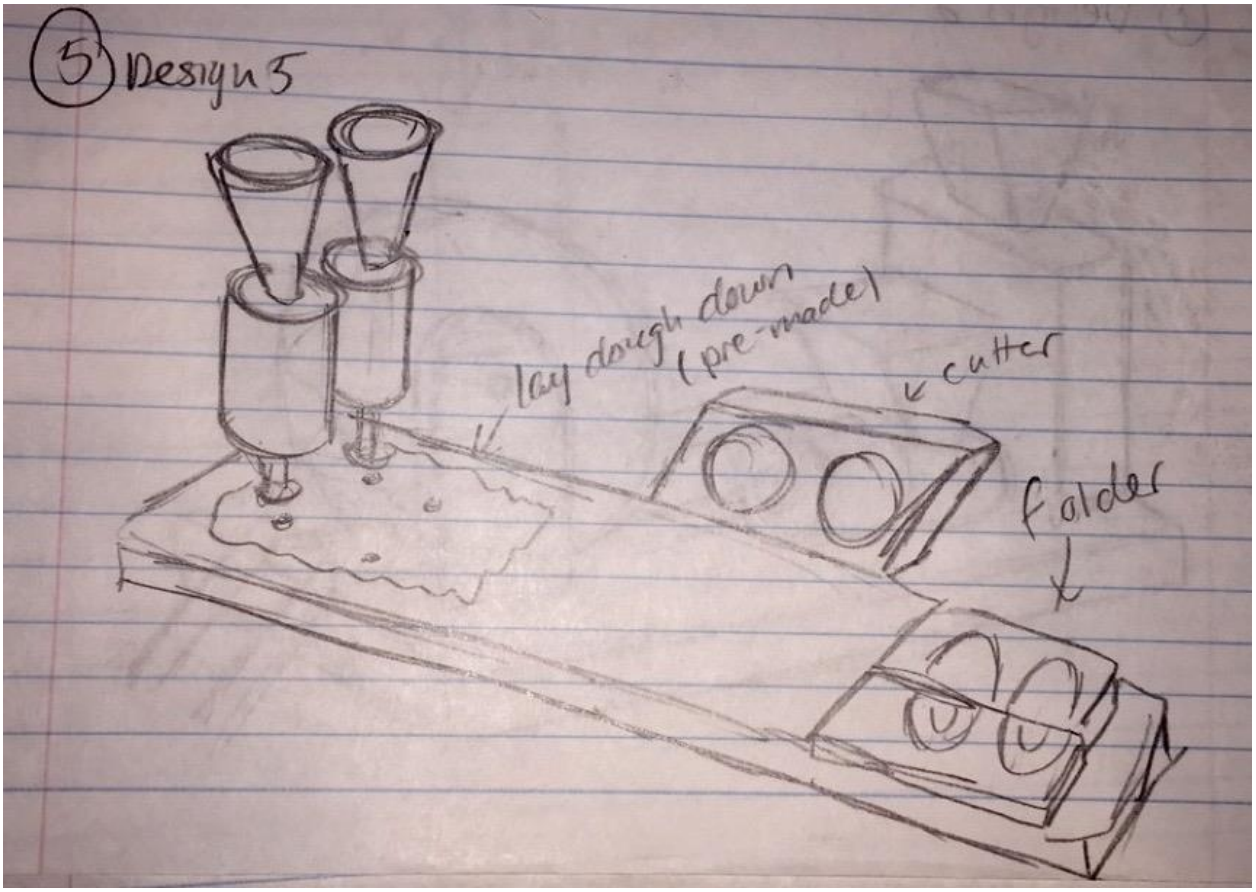
5 Design 5
lay dough down (pre-made)
cutter
folder

Design Selection Matrices:

Criteria	Design 1	Design 2	Design 3	Design 4	Design 5
Rate of Production	0	+	+	-	-
Ease of Operation	0	+	+	0	-
Quality of Dumplings	0	0	0	-	+
Size of Machine	-	0	0	0	0
Cost Efficiency	+	0	0	0	+
Fully Automatic	-	-	0	0	-
Volume of Ingredients	0	+	+	+	-
Sum +	1	3	3	1	2
Sum 0	4	3	4	4	1
Sum -	2	1	0	2	4
Net Score	-1	2	3	-1	-2
Rank	3	2	1	3	4
Continue?	NO	**YES**	**YES**	NO	NO

Design Selection (Weighted Scale)

		Design 2		Design 3	
Selection Criteria	**Weight %**	**Rating**	**Weighted Score**	**Rating**	**Weighted Score**
Rate of Production	20	3	0.6	4	0.8
Ease of Operation	10	4	0.4	4	0.4
Quality of Dumplings	10	3	0.3	3	0.3
Size of Machine	10	3	0.3	3	0.3
Cost Efficiency	20	3	0.6	3	0.6
Fully Automatic	15	4	0.6	4	0.6
Volume of Ingredients	15	3	0.45	4	0.6
TOTAL SCORE		3.25		3.6	
RANK		2nd		1st	
CONTINUE		NO		**YES**	

Final Design and its prototype:

ITEM NO.	PART NUMBER	DESCRIPTION	QTY.
1	Base	Durbale Plastic	1
2	Wheel Holder	Durable Plastic	1
3	Wheel	Durable Plastic	1
4	Wheel Blade	Stainless Steel	1
5	Wheel Axel Rod	Aluminum	1
6	Dough/Filling Tunnel	Stainless Steel	1
7	Dough Maker	Durable Plastic	1
8	Meat Processor	Durable Plastic	1
9	Dough Funnel	Durable Plastic	1
10	Meat Funnel	Durable Plastic	1

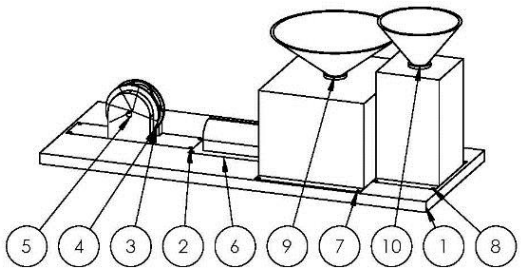

UNLESS OTHERWISE SPECIFIED:
DIMENSIONS ARE IN INCHES
TOLERANCES:
FRACTIONAL ±
ANGULAR: MACH ± BEND ±
TWO PLACE DECIMAL ±
THREE PLACE DECIMAL ±
INTERPRET GEOMETRIC TOLERANCING PER:
MATERIAL
FINISH

	NAME	DATE
DRAWN		
CHECKED		
ENG APPR.		
MFG APPR.		
Q.A.		

COMMENTS:

TITLE:

SIZE A | DWG. NO. Dumpling Maker | REV

SHEET 1 OF 1

NEXT ASSY | USED ON

PROPRIETARY AND CONFIDENTIAL
THE INFORMATION CONTAINED IN THIS DRAWING IS THE SOLE PROPERTY OF <INSERT COMPANY NAME HERE>. ANY REPRODUCTION IN PART OR AS A WHOLE WITHOUT THE WRITTEN PERMISSION OF <INS PRO

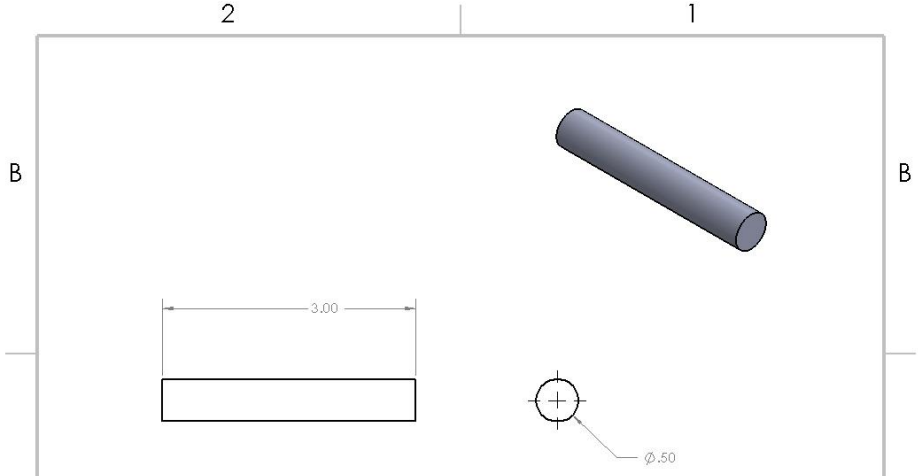

UNLESS OTHERWISE SPECIFIED:
DIMENSIONS ARE IN INCHES
TOLERANCES:
FRACTIONAL ±
ANGULAR: MACH ± BEND ±
TWO PLACE DECIMAL ±
THREE PLACE DECIMAL ±
INTERPRET GEOMETRIC TOLERANCING PER:
MATERIAL
FINISH

	NAME	DATE
DRAWN		
CHECKED		
ENG APPR.		
MFG APPR.		
Q.A.		

COMMENTS:

TITLE: Aluminum

SIZE A | DWG. NO. AxelRod | REV

SCALE: 1:1 | WEIGHT: | SHEET 1 OF 1

NEXT ASSY | USED ON

APPLICATION | DO NOT SCALE DRAWING

PROPRIETARY AND CONFIDENTIAL
THE INFORMATION CONTAINED IN THIS DRAWING IS THE SOLE PROPERTY OF <INSERT COMPANY NAME HERE>. ANY REPRODUCTION IN PART OR AS A WHOLE WITHOUT THE WRITTEN PERMISSION OF <INSERT COMPANY NAME HERE> IS PROHIBITED.

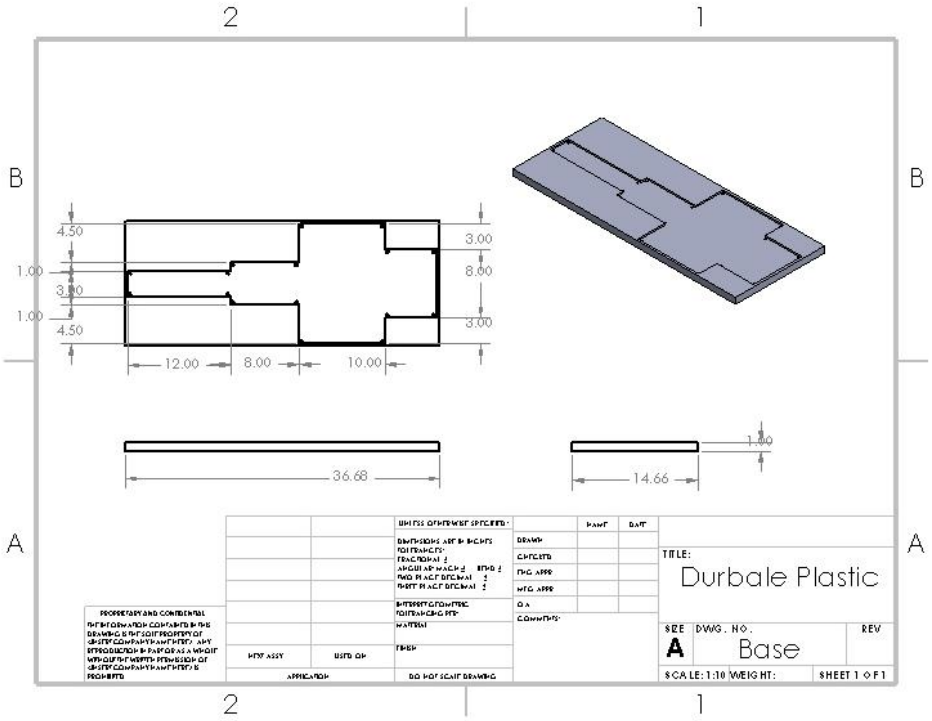
4.50
1.00
3.00
1.00
4.50
3.00
8.00
3.00
12.00
8.00
10.00
36.68
1.00
14.66
TITLE:
Durbale Plastic
SIZE
A
DWG. NO.
Base
REV
SCALE: 1:10
WEIGHT:
SHEET 1 OF 1

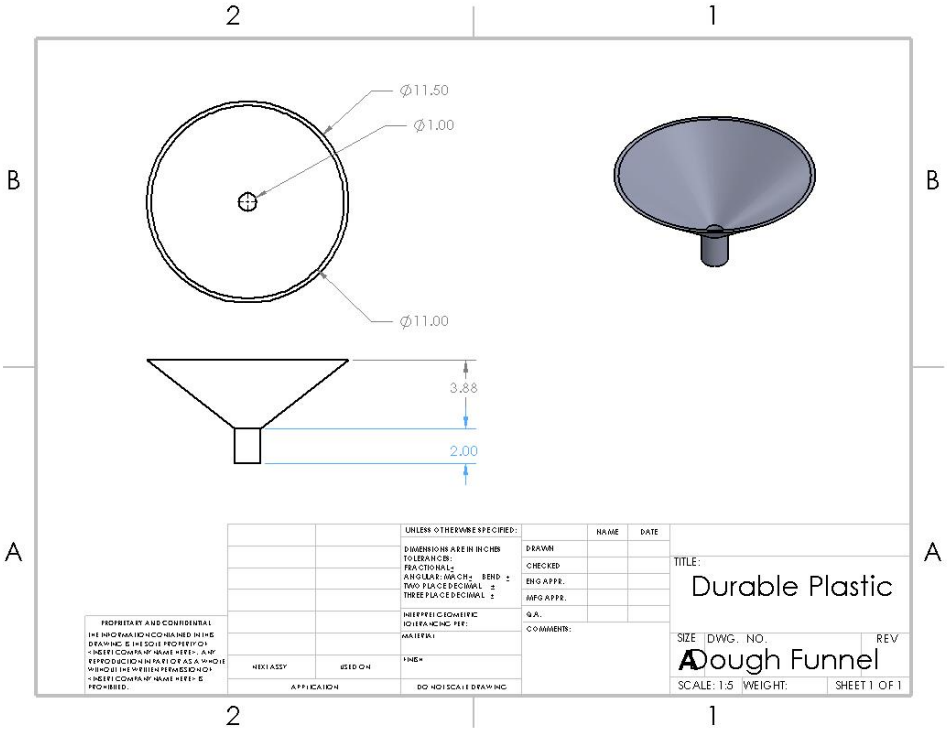
Ø11.50
Ø1.00
Ø11.00
3.88
2.00
TITLE:
Durable Plastic
SIZE
A
DWG. NO.
Dough Funnel
REV
SCALE: 1:5
WEIGHT:
SHEET 1 OF 1

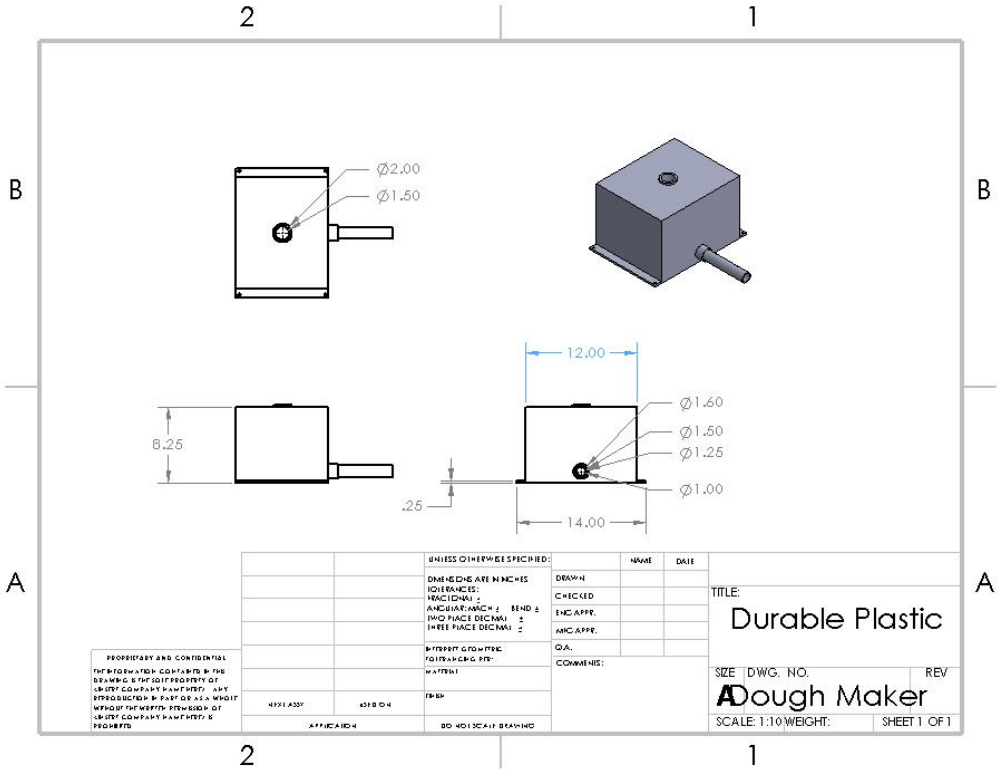
Ø2.00
Ø1.50
12.00
8.25
Ø1.60
Ø1.50
Ø1.25
Ø1.00
.25
14.00
UNLESS OTHERWISE SPECIFIED:
DIMENSIONS ARE IN INCHES
TOLERANCES:
FRACTIONAL ±
ANGULAR: MACH ± BEND ±
TWO PLACE DECIMAL ±
THREE PLACE DECIMAL ±
INTERPRET GEOMETRIC TOLERANCING PER:
MATERIAL
FINISH
DO NOT SCALE DRAWING
NEXT ASSY
USED ON
APPLICATION
PROPRIETARY AND CONFIDENTIAL
THE INFORMATION CONTAINED IN THIS DRAWING IS THE SOLE PROPERTY OF <INSERT COMPANY NAME HERE>. ANY REPRODUCTION IN PART OR AS A WHOLE WITHOUT THE WRITTEN PERMISSION OF <INSERT COMPANY NAME HERE> IS PROHIBITED.
NAME
DATE
DRAWN
CHECKED
ENG APPR.
MFG APPR.
Q.A.
COMMENTS:
TITLE:
Durable Plastic
SIZE
DWG. NO.
REV
Dough Maker
SCALE: 1:10
WEIGHT:
SHEET 1 OF 1

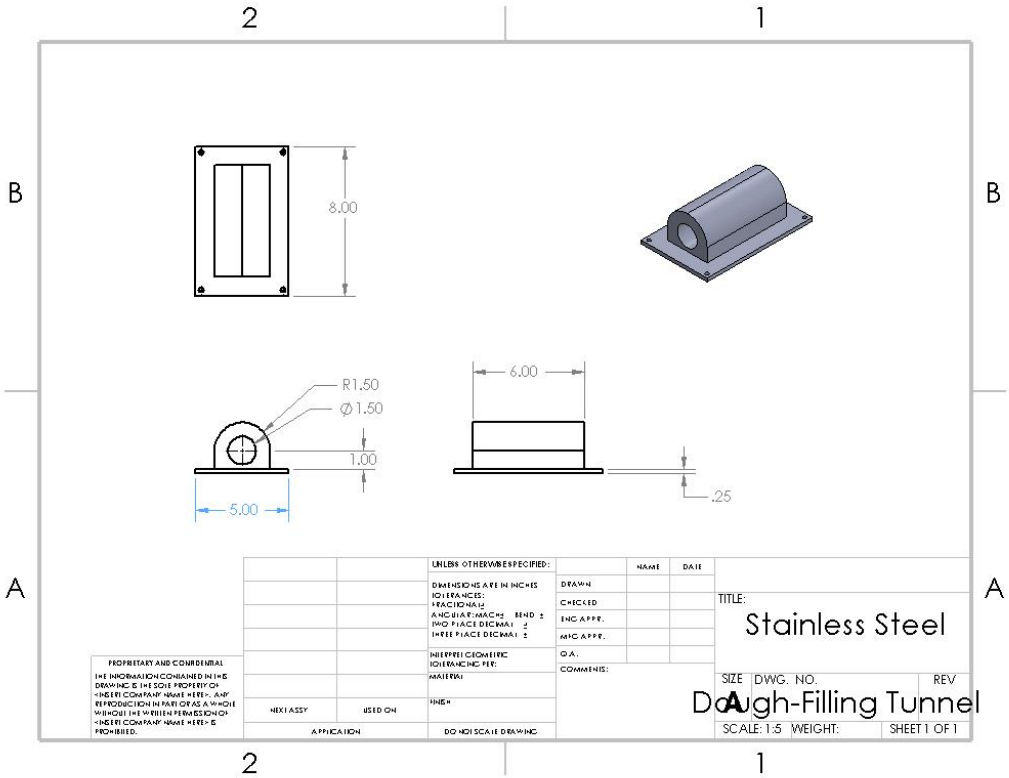
8.00
R1.50
Ø1.50
1.00
5.00
6.00
.25
UNLESS OTHERWISE SPECIFIED:
DIMENSIONS ARE IN INCHES
TOLERANCES:
FRACTIONAL ±
ANGULAR: MACH ± BEND ±
TWO PLACE DECIMAL ±
THREE PLACE DECIMAL ±
INTERPRET GEOMETRIC TOLERANCING PER:
MATERIAL
FINISH
DO NOT SCALE DRAWING
NEXT ASSY
USED ON
APPLICATION
PROPRIETARY AND CONFIDENTIAL
THE INFORMATION CONTAINED IN THIS DRAWING IS THE SOLE PROPERTY OF <INSERT COMPANY NAME HERE>. ANY REPRODUCTION IN PART OR AS A WHOLE WITHOUT THE WRITTEN PERMISSION OF <INSERT COMPANY NAME HERE> IS PROHIBITED.
NAME
DATE
DRAWN
CHECKED
ENG APPR.
MFG APPR.
Q.A.
COMMENTS:
TITLE:
Stainless Steel
SIZE
DWG. NO.
REV
Dough-Filling Tunnel
SCALE: 1:5
WEIGHT:
SHEET 1 OF 1

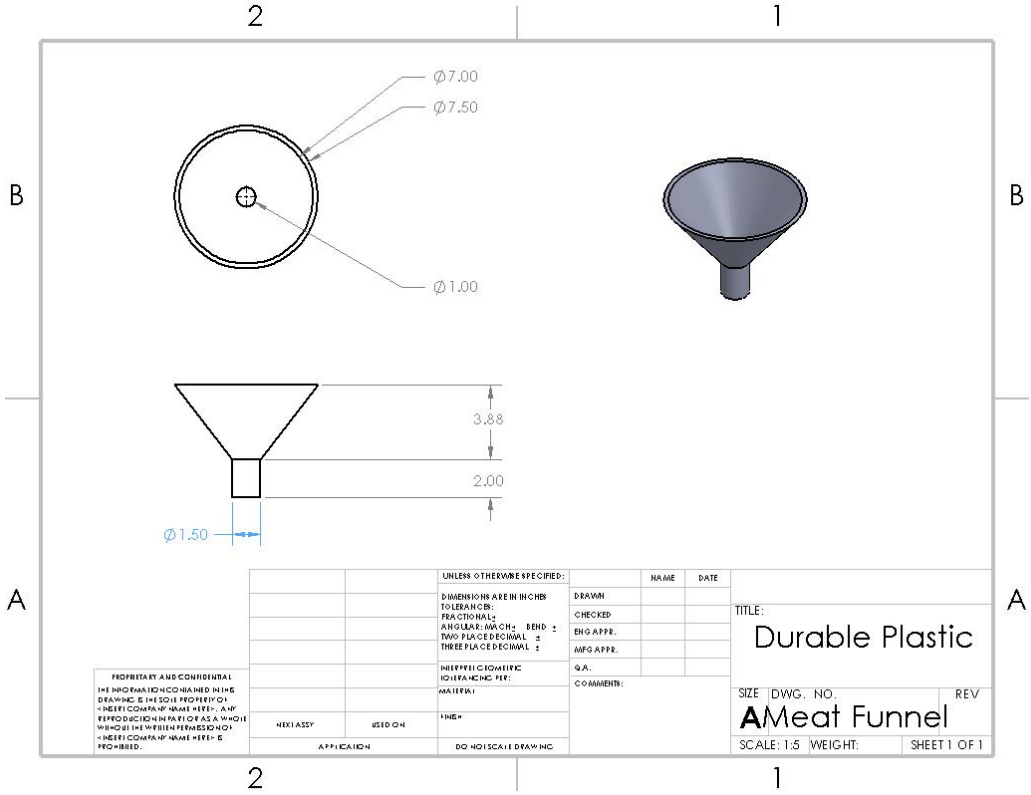
Ø7.00
Ø7.50
Ø1.00
3.88
2.00
Ø1.50
UNLESS OTHERWISE SPECIFIED:
DIMENSIONS ARE IN INCHES
TOLERANCES:
FRACTIONAL±
ANGULAR: MACH± BEND ±
TWO PLACE DECIMAL ±
THREE PLACE DECIMAL ±
INTERPRET GEOMETRIC TOLERANCING PER:
MATERIAL
FINISH
DO NOT SCALE DRAWING
NAME
DATE
DRAWN
CHECKED
ENG APPR.
MFG APPR.
Q.A.
COMMENTS:
TITLE:
Durable Plastic
SIZE
DWG. NO.
REV
AMeat Funnel
SCALE: 1:5
WEIGHT:
SHEET 1 OF 1
PROPRIETARY AND CONFIDENTIAL
THE INFORMATION CONTAINED IN THIS DRAWING IS THE SOLE PROPERTY OF <INSERT COMPANY NAME HERE>. ANY REPRODUCTION IN PART OR AS A WHOLE WITHOUT THE WRITTEN PERMISSION OF <INSERT COMPANY NAME HERE> IS PROHIBITED.
NEXT ASSY
USED ON
APPLICATION

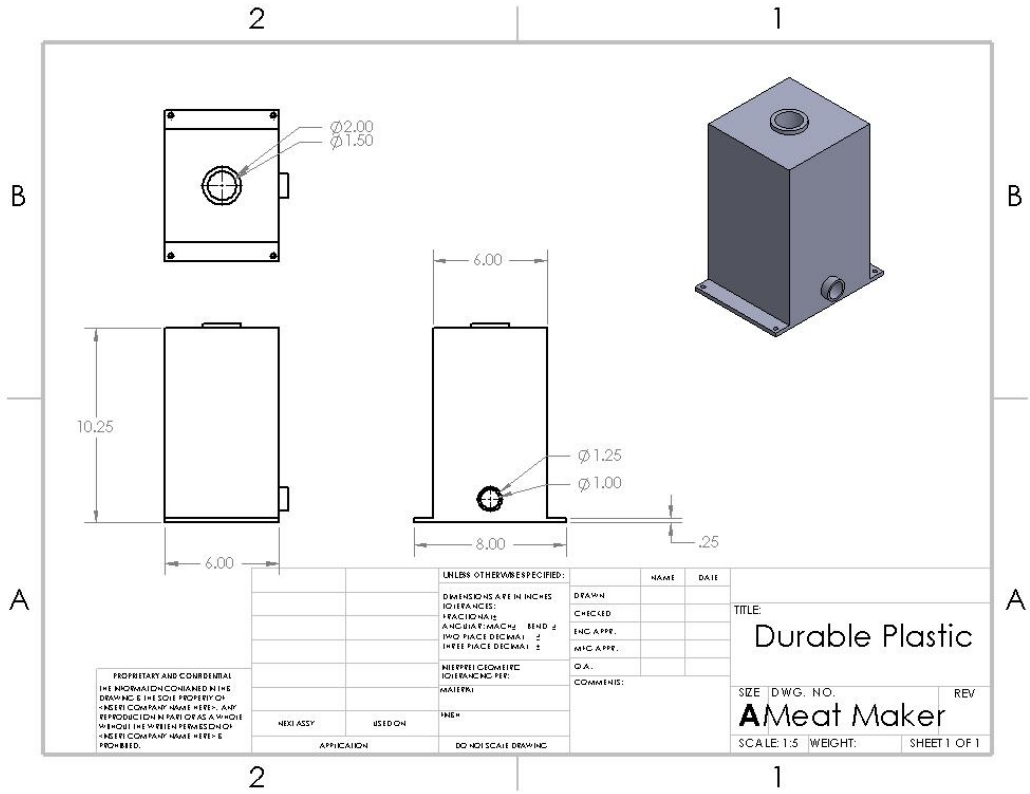
Ø2.00
Ø1.50
6.00
10.25
Ø1.25
Ø1.00
8.00
.25
6.00
UNLESS OTHERWISE SPECIFIED:
DIMENSIONS ARE IN INCHES
TOLERANCES:
FRACTIONAL±
ANGULAR: MACH± BEND ±
TWO PLACE DECIMAL ±
THREE PLACE DECIMAL ±
INTERPRET GEOMETRIC TOLERANCING PER:
MATERIAL
FINISH
DO NOT SCALE DRAWING
NAME
DATE
DRAWN
CHECKED
ENG APPR.
MFG APPR.
Q.A.
COMMENTS:
TITLE:
Durable Plastic
SIZE
DWG. NO.
REV
AMeat Maker
SCALE: 1:5
WEIGHT:
SHEET 1 OF 1
PROPRIETARY AND CONFIDENTIAL
THE INFORMATION CONTAINED IN THIS DRAWING IS THE SOLE PROPERTY OF <INSERT COMPANY NAME HERE>. ANY REPRODUCTION IN PART OR AS A WHOLE WITHOUT THE WRITTEN PERMISSION OF <INSERT COMPANY NAME HERE> IS PROHIBITED.
NEXT ASSY
USED ON
APPLICATION

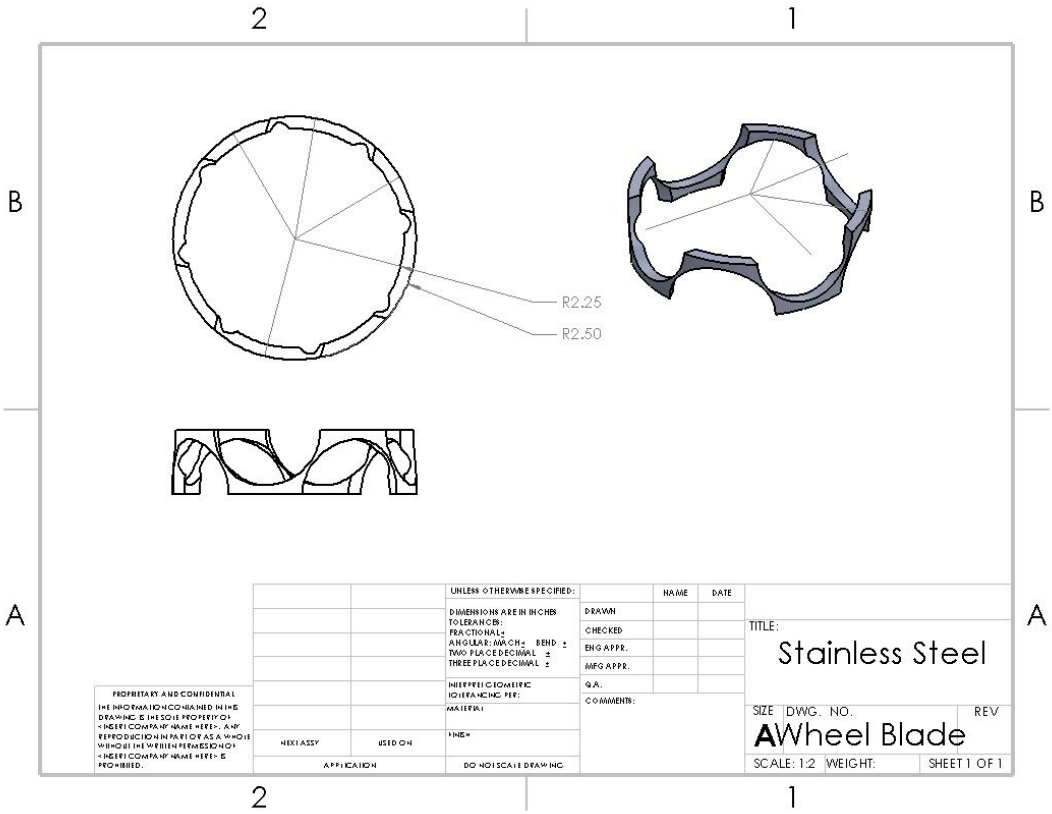
R2.25
R2.50
UNLESS OTHERWISE SPECIFIED:
DIMENSIONS ARE IN INCHES
TOLERANCES:
FRACTIONAL ±
ANGULAR: MACH ± BEND ±
TWO PLACE DECIMAL ±
THREE PLACE DECIMAL ±
INTERPRET GEOMETRIC TOLERANCING PER:
MATERIAL
FINISH
DO NOT SCALE DRAWING
NAME
DATE
DRAWN
CHECKED
ENG APPR.
MFG APPR.
Q.A.
COMMENTS:
TITLE:
Stainless Steel
SIZE
DWG. NO.
REV
A
Wheel Blade
SCALE: 1:2
WEIGHT:
SHEET 1 OF 1
PROPRIETARY AND CONFIDENTIAL
THE INFORMATION CONTAINED IN THIS DRAWING IS THE SOLE PROPERTY OF <INSERT COMPANY NAME HERE>. ANY REPRODUCTION IN PART OR AS A WHOLE WITHOUT THE WRITTEN PERMISSION OF <INSERT COMPANY NAME HERE> IS PROHIBITED.
NEXT ASSY
USED ON
APPLICATION

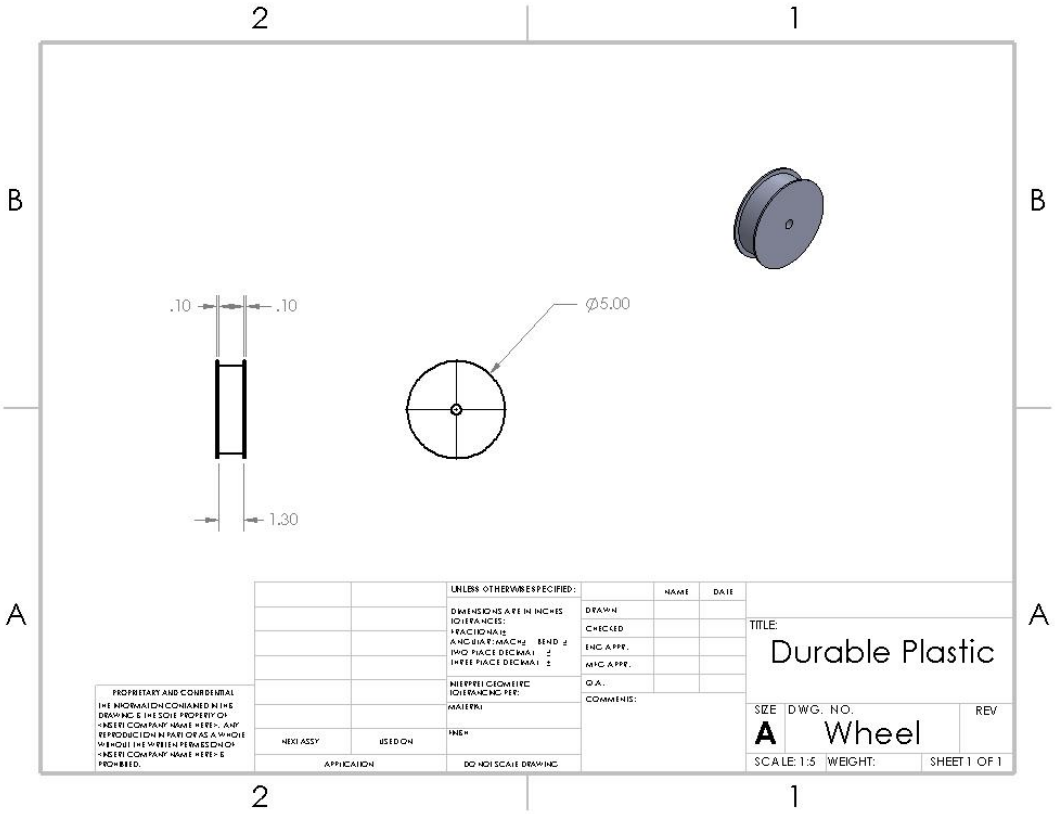
.10
.10
Ø5.00
1.30
UNLESS OTHERWISE SPECIFIED:
DIMENSIONS ARE IN INCHES
TOLERANCES:
FRACTIONAL ±
ANGULAR: MACH ± BEND ±
TWO PLACE DECIMAL ±
THREE PLACE DECIMAL ±
INTERPRET GEOMETRIC TOLERANCING PER:
MATERIAL
FINISH
DO NOT SCALE DRAWING
NAME
DATE
DRAWN
CHECKED
ENG APPR.
MFG APPR.
Q.A.
COMMENTS:
TITLE:
Durable Plastic
SIZE
DWG. NO.
REV
A
Wheel
SCALE: 1:5
WEIGHT:
SHEET 1 OF 1
PROPRIETARY AND CONFIDENTIAL
THE INFORMATION CONTAINED IN THIS DRAWING IS THE SOLE PROPERTY OF <INSERT COMPANY NAME HERE>. ANY REPRODUCTION IN PART OR AS A WHOLE WITHOUT THE WRITTEN PERMISSION OF <INSERT COMPANY NAME HERE> IS PROHIBITED.
NEXT ASSY
USED ON
APPLICATION

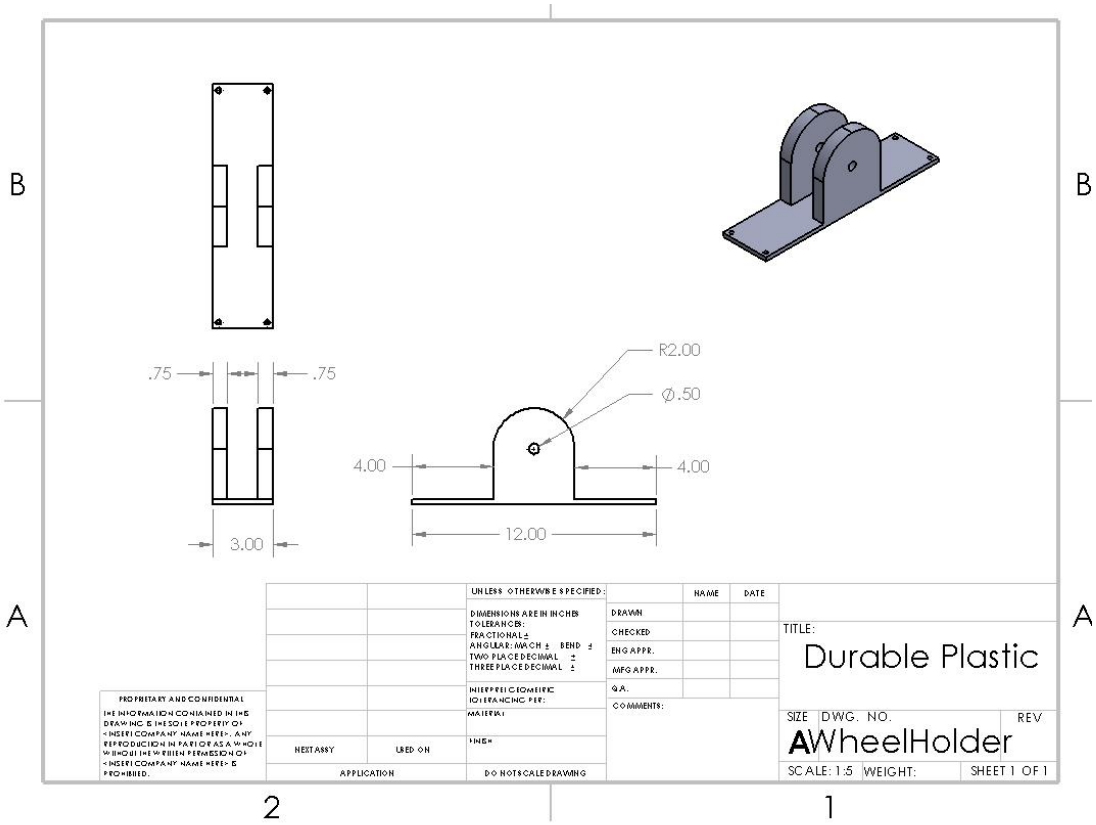
.75
.75
3.00
R2.00
Ø.50
4.00
4.00
12.00
UNLESS OTHERWISE SPECIFIED:
DIMENSIONS ARE IN INCHES
TOLERANCES:
FRACTIONAL ±
ANGULAR: MACH ± BEND ±
TWO PLACE DECIMAL ±
THREE PLACE DECIMAL ±
INTERPRET GEOMETRIC
TOLERANCING PER:
MATERIAL
FINISH
DO NOT SCALE DRAWING
NEXT ASSY
USED ON
APPLICATION
NAME
DATE
DRAWN
CHECKED
ENG APPR.
MFG APPR.
Q.A.
COMMENTS:
TITLE:
Durable Plastic
SIZE
DWG. NO.
REV
AWheelHolder
SCALE: 1:5
WEIGHT:
SHEET 1 OF 1
PROPRIETARY AND CONFIDENTIAL
THE INFORMATION CONTAINED IN THIS DRAWING IS THE SOLE PROPERTY OF <INSERT COMPANY NAME HERE>. ANY REPRODUCTION IN PART OR AS A WHOLE WITHOUT THE WRITTEN PERMISSION OF <INSERT COMPANY NAME HERE> IS PROHIBITED.
B
A
2
1

Prototype scale and a digital image(s) of prototype:

Scale 1:1

Design Features:

Group 3's Dumpling Maker 1.0 offers many bold and useful feature. First of which is that the entire process is automatic, offering the easiest dumpling making experience possible. The machine prepares the filling and dough for the user based on raw materials that the consumer puts in. All components of the machine including dough maker, filling processor, tubing, etc. is entirely removable and replaceable if program or in need of updating. The key feature of the machine is the speed and efficiency with which it makes dumplings, thanks to the specialty cutting wheel. The cutting wheel presses the dough and filling with no loss into perfectly shaped dumplings.

Operation Instructions:

Operation of Group 3's Dumpling Maker is very simple. Put all filling ingredients into a bowl. This includes all meats, vegetables, and seasoning that would normally be used to fill a dumpling. This whole bowl can be poured into the posterior funnel where it will be minced and mixed inside the machine with the same consistency as would come from a food processor. All dough ingredients will be poured independently into the anterior funnel. The dough mixer in the container will mix and knead the dough like any other dough maker would. A tube coming from the filling processor runs through the dough maker and pumps out filling. A tube coming from the dough maker surrounds the filling tube and pumps out dough. Dough is pumped out in a pipe like shape with a filling cylinder in the center. This "dumpling cylinder" then runs under a spinning wheel that cuts and presses it into dumpling shapes that are dumped off the end of the machine.

Engineering Analysis

Working Mechanism:

The whole machine is run by electricity that The Filling Processor works like any other food processor. There is a pair of rotating blades that minces the meat and all other filling raw materials. A piston in the tube at the base pushes the filling through the piping. In the dough maker, rods rotate around, kneading and preparing the dough from the raw flour and water poured in. A similar piston mechanism pushes the dough through a pipe around the filling pipe.

Cost analysis:

Item	Cost	Quantity	Total
Base	$22.14	1	$22.14
Wheel Holder	$12.11	1	$12.11
Wheel	$11.12	1	$11.12
Wheel Blade	$32.19	1	$32.19
Wheel Axel Rod	$9.73	1	$9.73
Dough/Filling Tunnel	$21.29	1	$21.29
Dough Maker	$39.99	1	$39.99
Meat Processor	$34.99	1	$34.99
Dough Funnel	$6.89	1	$6.89
Meat Funnel	$6.89	1	$6.89
TOTAL			$197.34

Summary and Conclusion

We began our brainstorming by examining each step in the dumpling making process. In this way, were able to independently come up with the best way to perform each step and put it all together in one efficient machine. We also did a small amount of market research by asking various Chinese restaurants a few questions pertaining to the machine. We were able to confirm the need for this machine and the willingness of the owners to pay a premium price for the machine. They specified that the machine should not take up too much space, should be fully automatic, and should not require too much difficult maintenance. As such, we chose the final design that was most efficient given the space allotted and that was incredibly easy to clean. Furthermore, all parts are fully removable for easier cleaning and upgradability. Furthermore, the processor and dough maker can be removed and act as a food processor and dough maker independently of the machine as a whole. The only flaw in our design would be the high final cost. It stays within the limitations set by Professor Xinli Wu, but it pushes the boundaries and can be easily cut by removing excess materials in the base and piping. Overall, however, Group 3 is very happy with the final design chosen because of its fully automatic nature, speed, and efficiency.

Acknowledgement

Team 3 would like to acknowledge and thank all the restaurants whom participated in our questionnaire to obtain the guidelines for the Fully Automatic Dumpling Maker 1.0. The Team would also like to thank Xinli Wu, Ph.D., P.E., for his commitment to not only the whole class of engineers but more specifically to helping Team 3 learn the process of building and analyzing a prototype and design concept.